Supernova Acceleration Probe
TMA-43 Launch Configuration

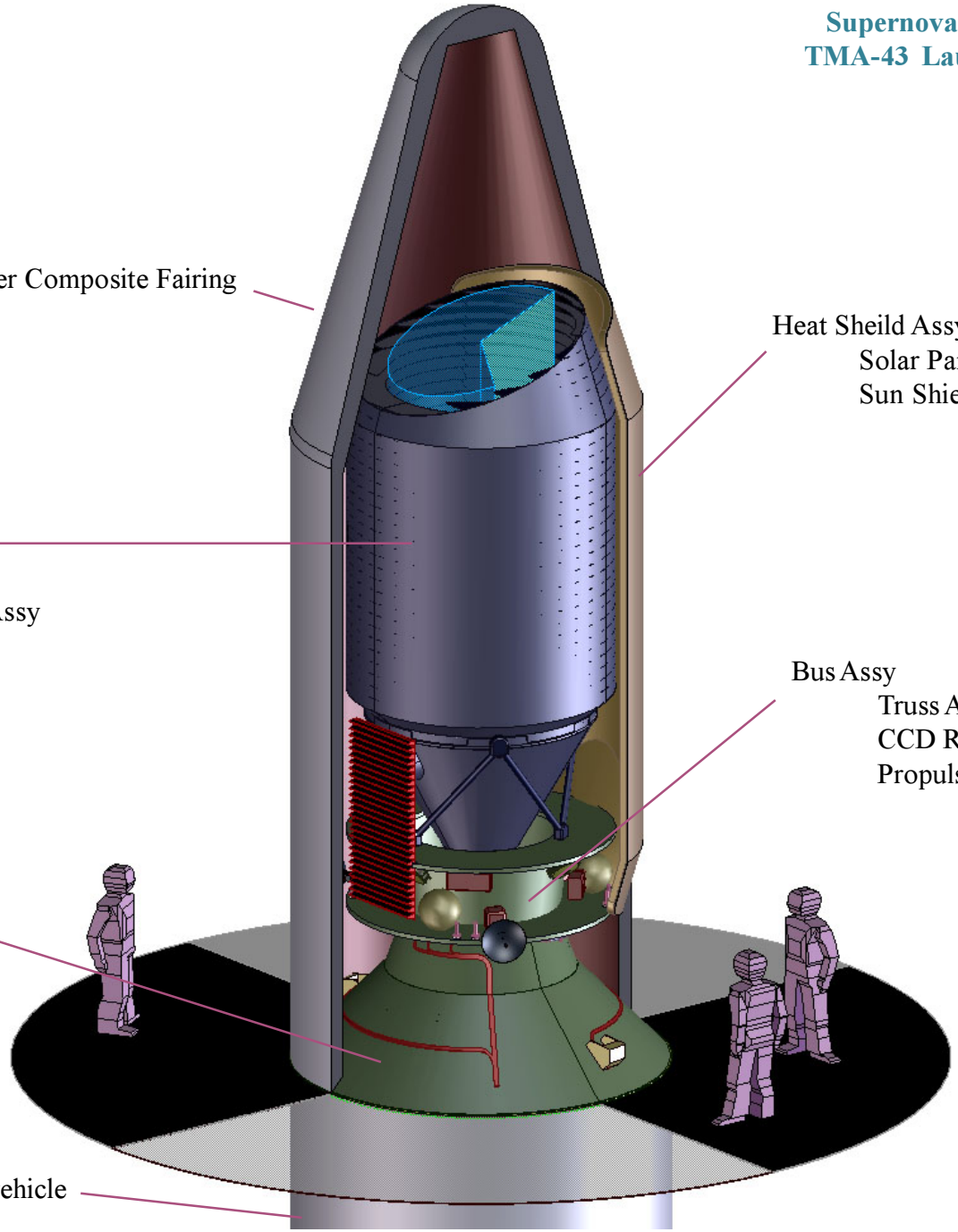

Supernova Acceleration Probe
TMA-43 2 meter aperture telescope
Mk3 Optical Bench

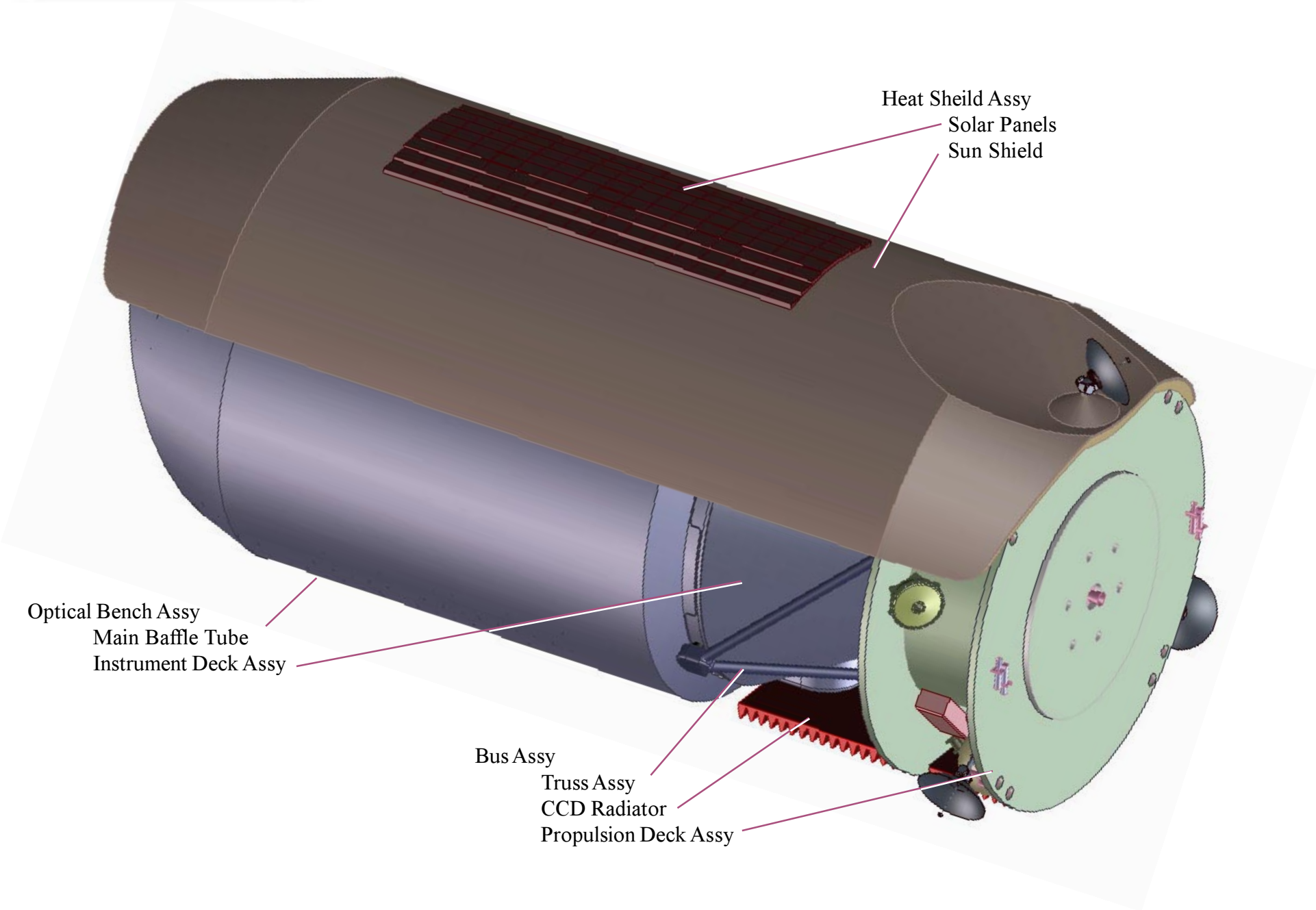

Supernova Acceleration Probe
TMA-43 2 meter aperture telescope
Mk3 Optical Bench

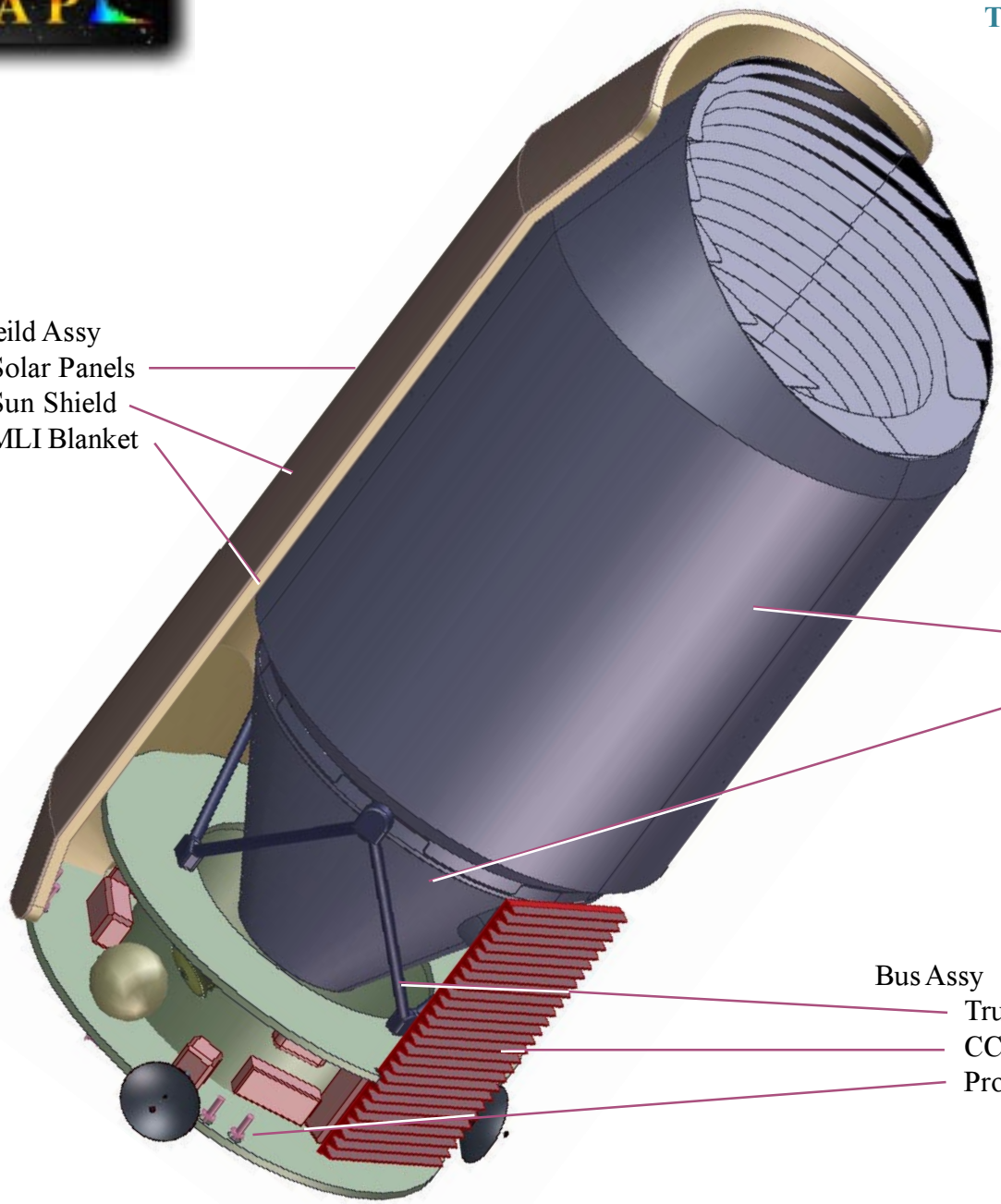

TMA-43 Beam Envelope
Mk3 Optical Bench
(Main Baffles and shrouds not shown)

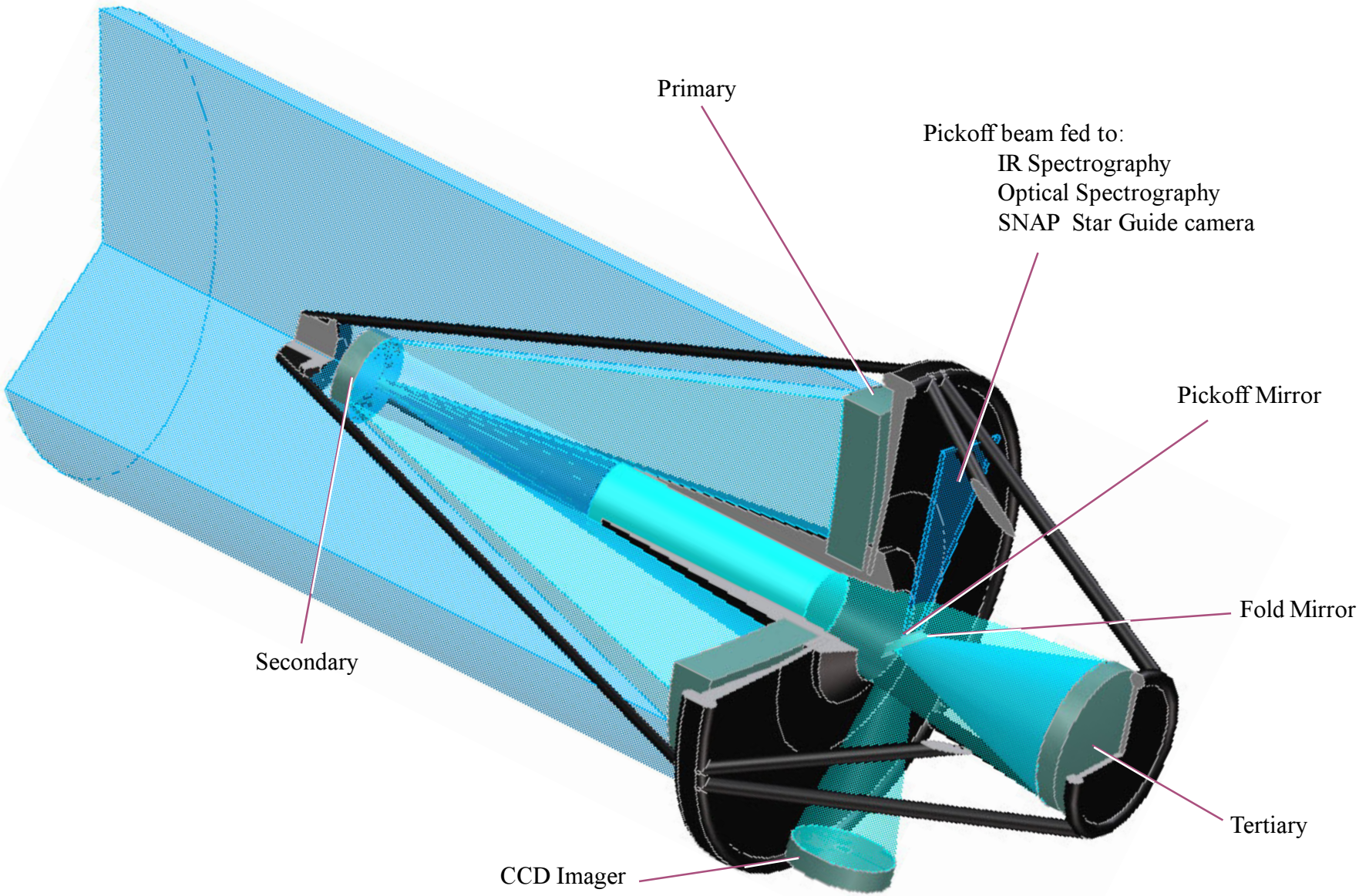

TMA-43 Beam Envelope
Mk3 Optical Bench
(Main Baffles and shrouds not shown)

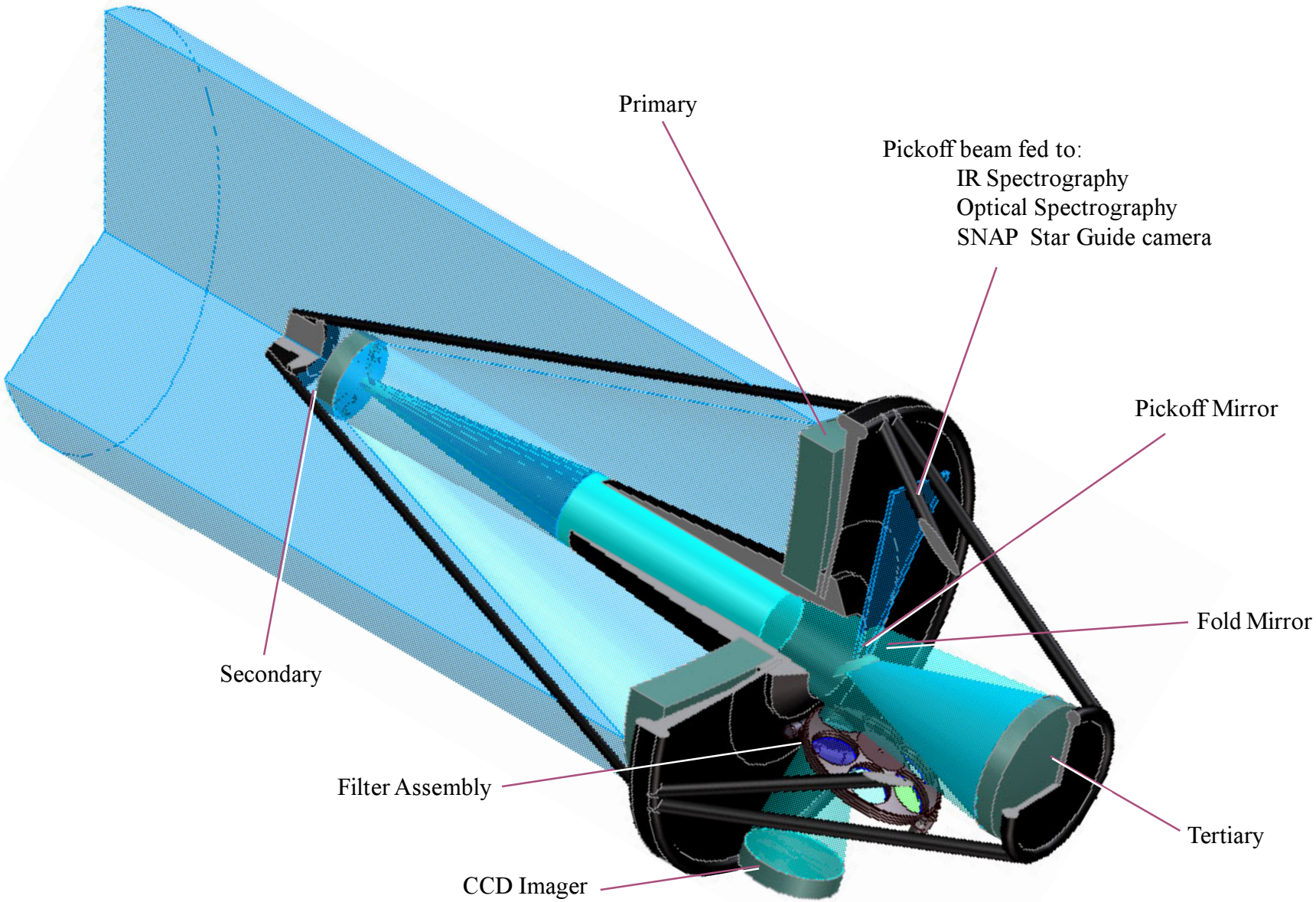

Instrument Deck
TMA-43 Beam Envelope
Mk3 Optical Bench
(Main Baffles and shrouds not shown)

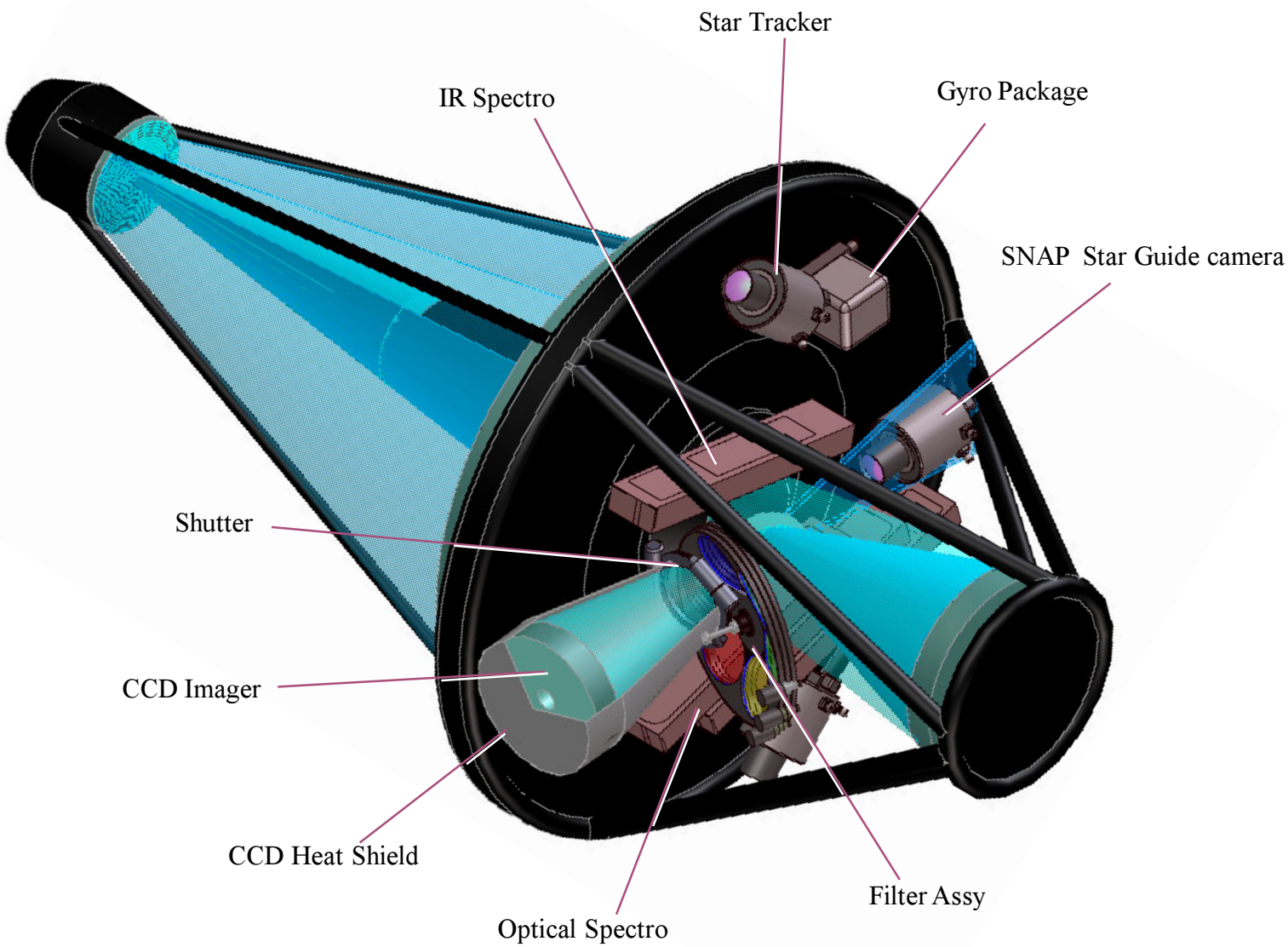

Supernova Acceleration Probe
TMA-43 Beam Envelope
Mk3 Optical Bench

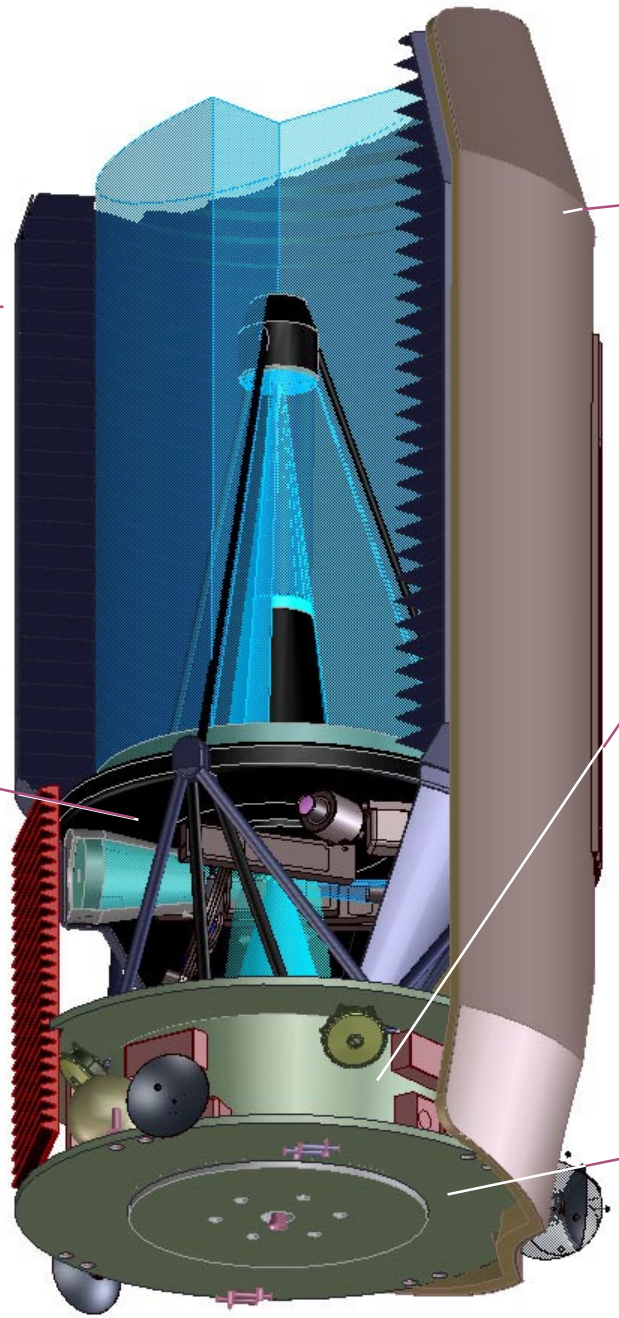

Heat Shield Assy
- Solar Panels
- Sun Shield
- MLI Blanket
- Sun Position sensors

Optical Bench Assy
- Main Baffle Tube
- Secondary Baffle
- Inner Baffle
- Space Frame

Bus Assy
- Truss Assy
- Composite shear Assy
- CCD Radiator
- Reaction wheel Assy
- 3 x 70cm dia. Hi-gain GMAs
- 2 x Lo-Gain Antennas
- Transponder
- Battery
- Mass Memory Unit (MMU)
- Spacecraft Control Unit (SCU)
- Power Control Unit (PCU)

Instrument Deck Assy
- CCD Imager
- CCD Heat shield
- Filter Assy
- Shutter
- Star tracker cameras
- SNAP Star Guide camera
- Gyro Assy
- IR Spectro
- Optical Spectro

Propulsion Deck Assy
- 12 x .5 lbf engines
- 1 x 5.0 lbf engine
- 3 x 47 cm dia. tanks
- Controls

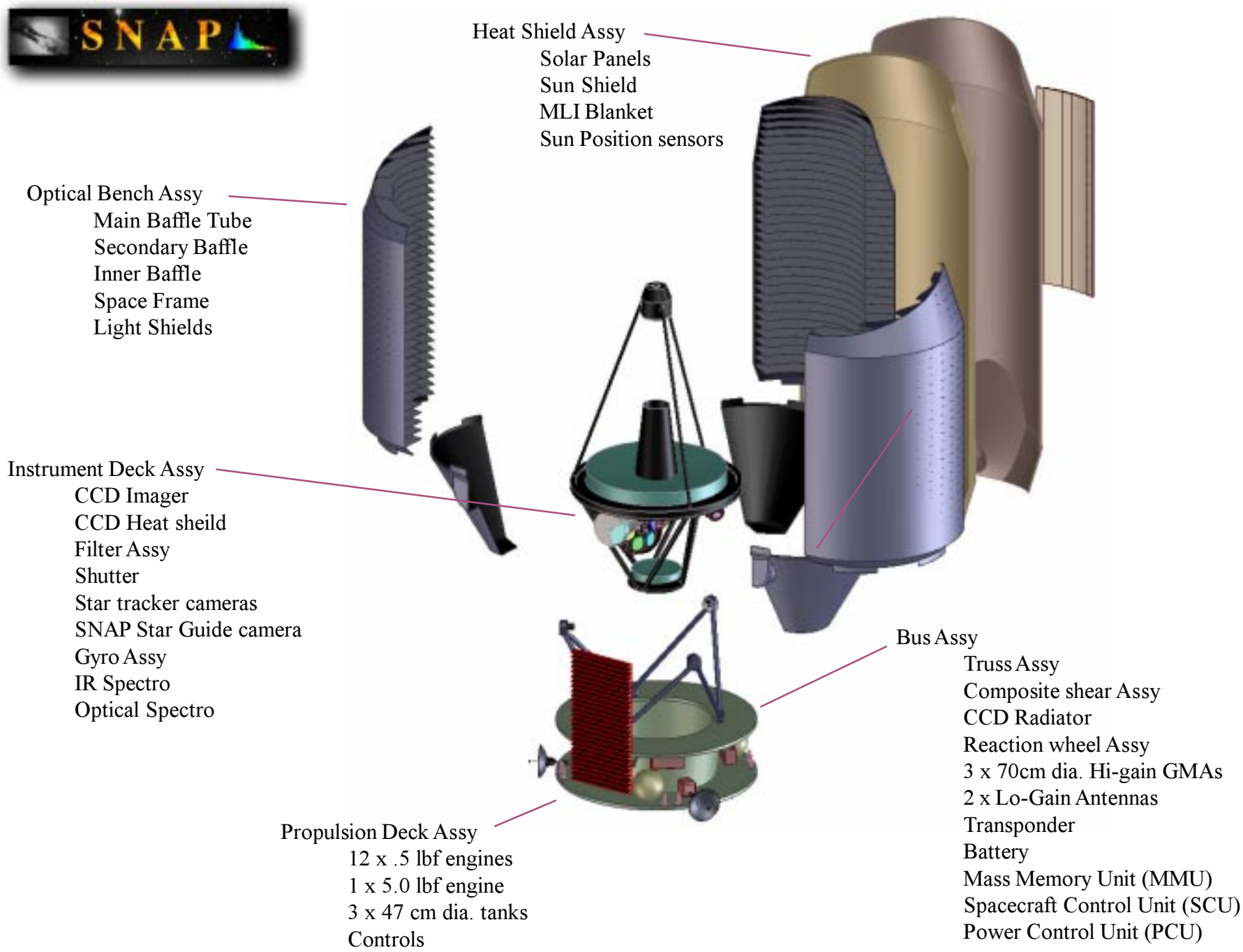
SNAP
Heat Shield Assy
Solar Panels
Sun Shield
MLI Blanket
Sun Position sensors
Optical Bench Assy
Main Baffle Tube
Secondary Baffle
Inner Baffle
Space Frame
Light Shields
Instrument Deck Assy
CCD Imager
CCD Heat sheild
Filter Assy
Shutter
Star tracker cameras
SNAP Star Guide camera
Gyro Assy
IR Spectro
Optical Spectro
Bus Assy
Truss Assy
Composite shear Assy
CCD Radiator
Reaction wheel Assy
3 x 70cm dia. Hi-gain GMAs
2 x Lo-Gain Antennas
Transponder
Battery
Mass Memory Unit (MMU)
Spacecraft Control Unit (SCU)
Power Control Unit (PCU)
Propulsion Deck Assy
12 x .5 lbf engines
1 x 5.0 lbf engine
3 x 47 cm dia. tanks
Controls

Instrument Deck Assy
- CCD Imager
- CCD Heat shield
- Filter Assy
- Shutter
- Star tracker cameras
- SNAP Star Guide camera
- Gyro Assy
- IR Spectro
- Optical Spectro

Optical Bench Assy
- Main Baffle Tube
- Secondary Baffle
- Inner Baffle
- Space Frame
- Light Shields

Bus Assy
- Truss Assy
- Composite shear Assy
- CCD Radiator
- Reaction wheel Assy
- 3 x 70cm dia. Hi-gain GMAs
- 2 x Lo-Gain Antennas
- Transponder
- Battery
- Mass Memory Unit (MMU)
- Spacecraft Control Unit (SCU)
- Power Control Unit (PCU)

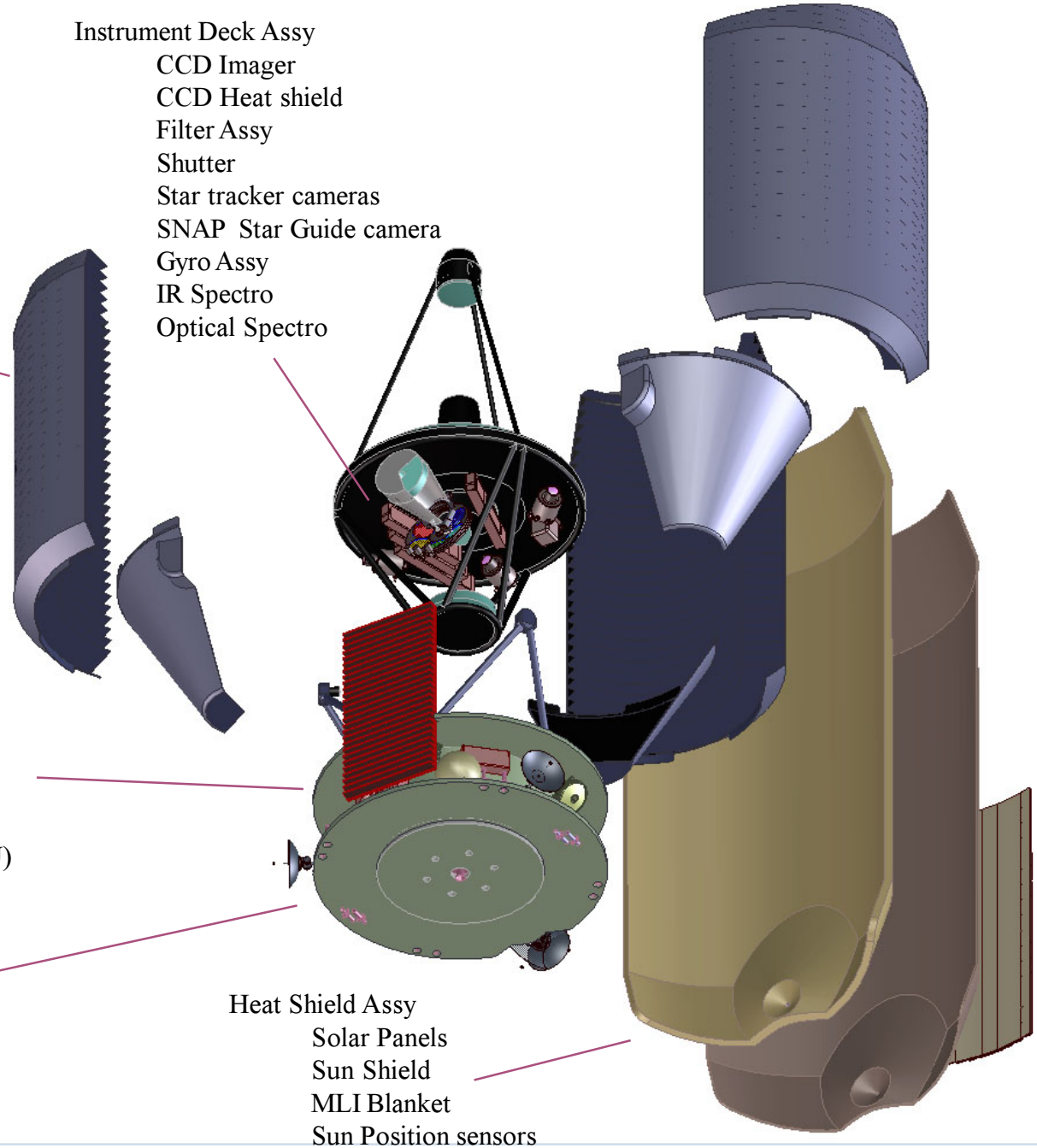

Propulsion Deck Assy
- 12 x .5 lbf engines
- 1 x 5.0 lbf engine
- 3 x 47 cm dia. tanks
- Controls

Heat Shield Assy
- Solar Panels
- Sun Shield
- MLI Blanket
- Sun Position sensors

SNAP

Optical Bench Assy
- Main Baffle Tube
- Secondary Baffle
- Inner Baffle
- Space Frame
- Light Shields

Instrument Deck Assy
- CCD Imager
- CCD Heat sheild
- Filter Assy
- Shutter
- Star tracker cameras
- SNAP Star Guide camera
- Gyro Assy
- IR Spectro
- Optical Spectro

Bus Assy
- Truss Assy
- Composite shear Assy
- CCD Radiator
- Reaction wheel Assy
- 3 x 70cm dia. Hi-gain GMAs
- 2 x Lo-Gain Antennas
- Transponder
- Battery
- Mass Memory Unit (MMU)
- Spacecraft Control Unit (SCU)
- Power Control Unit (PCU)

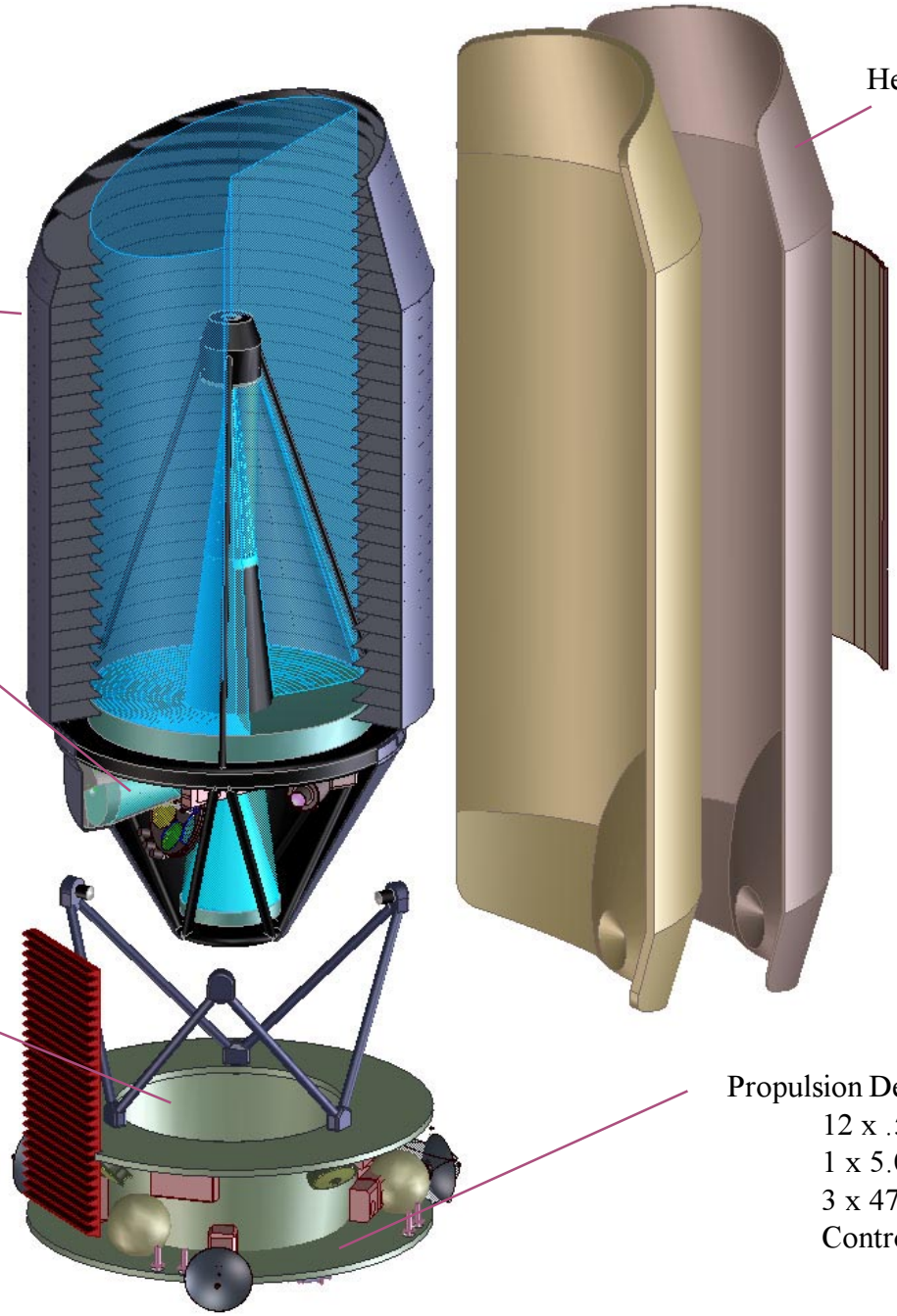

Heat Shield Assy
- Solar Panels
- Sun Shield
- MLI Blanket
- Sun Position sensors

Propulsion Deck Assy
- 12 x .5 lbf engines
- 1 x 5.0 lbf engine
- 3 x 47 cm dia. tanks
- Controls

SNAP

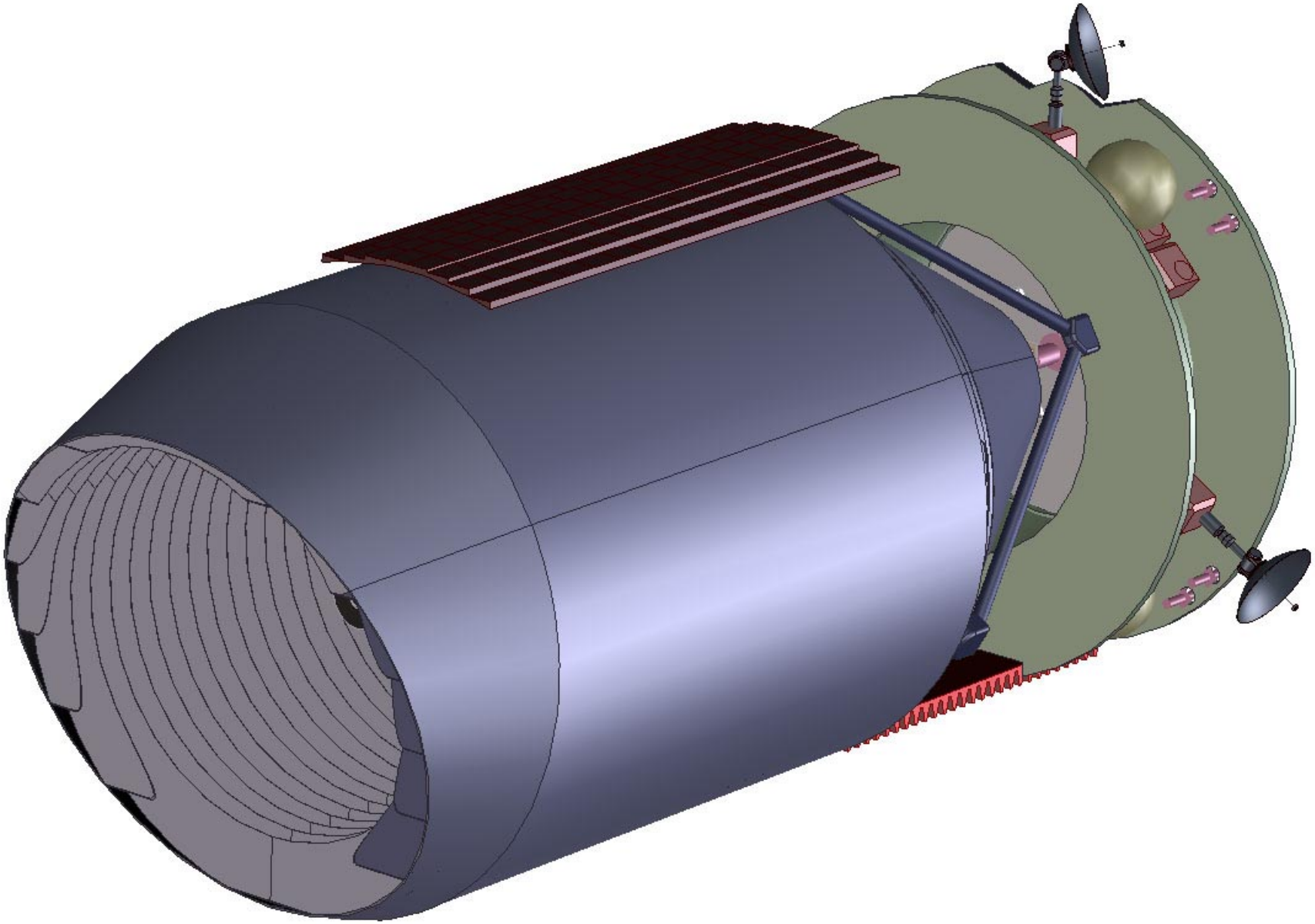

SNAP

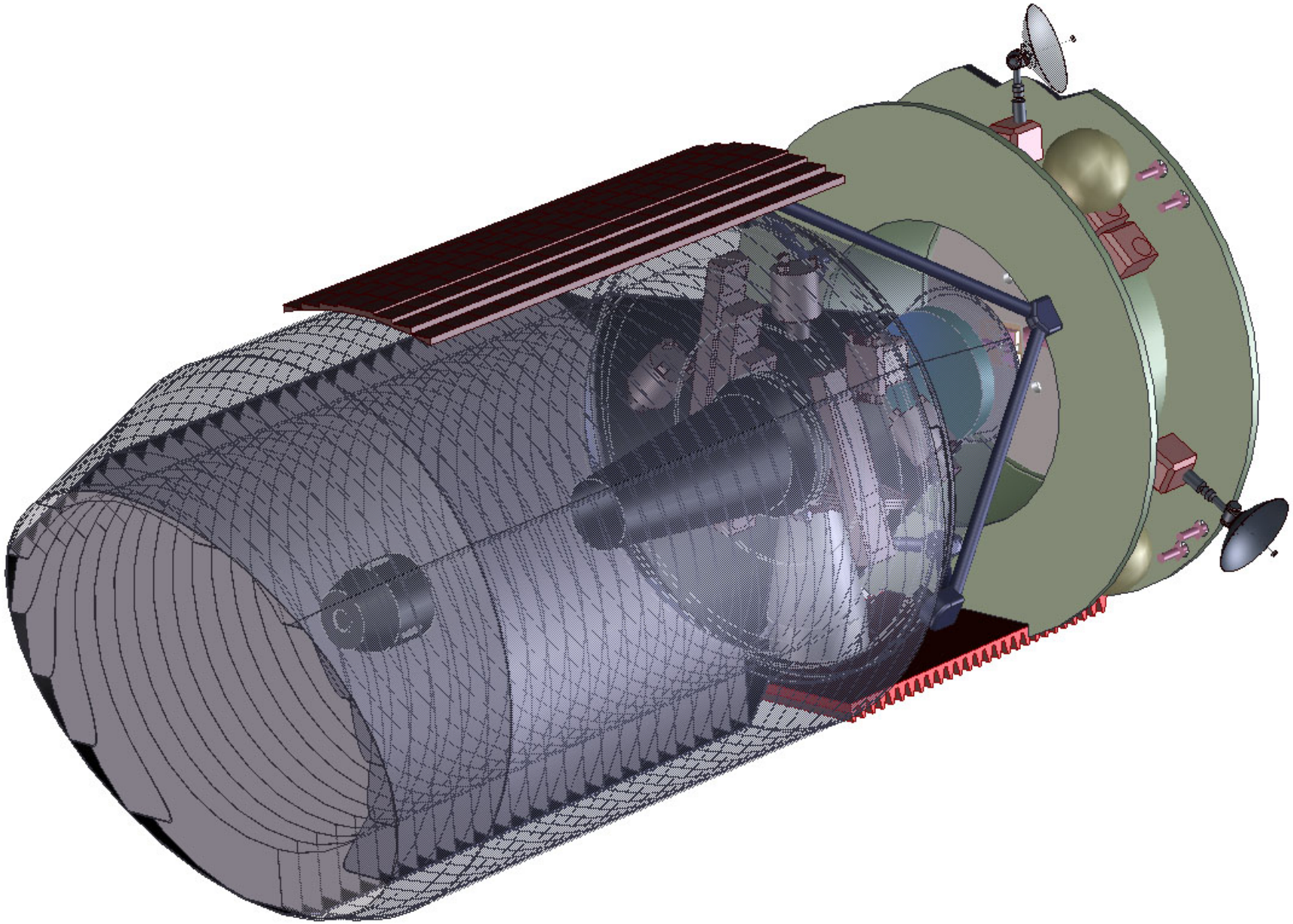

SNAP

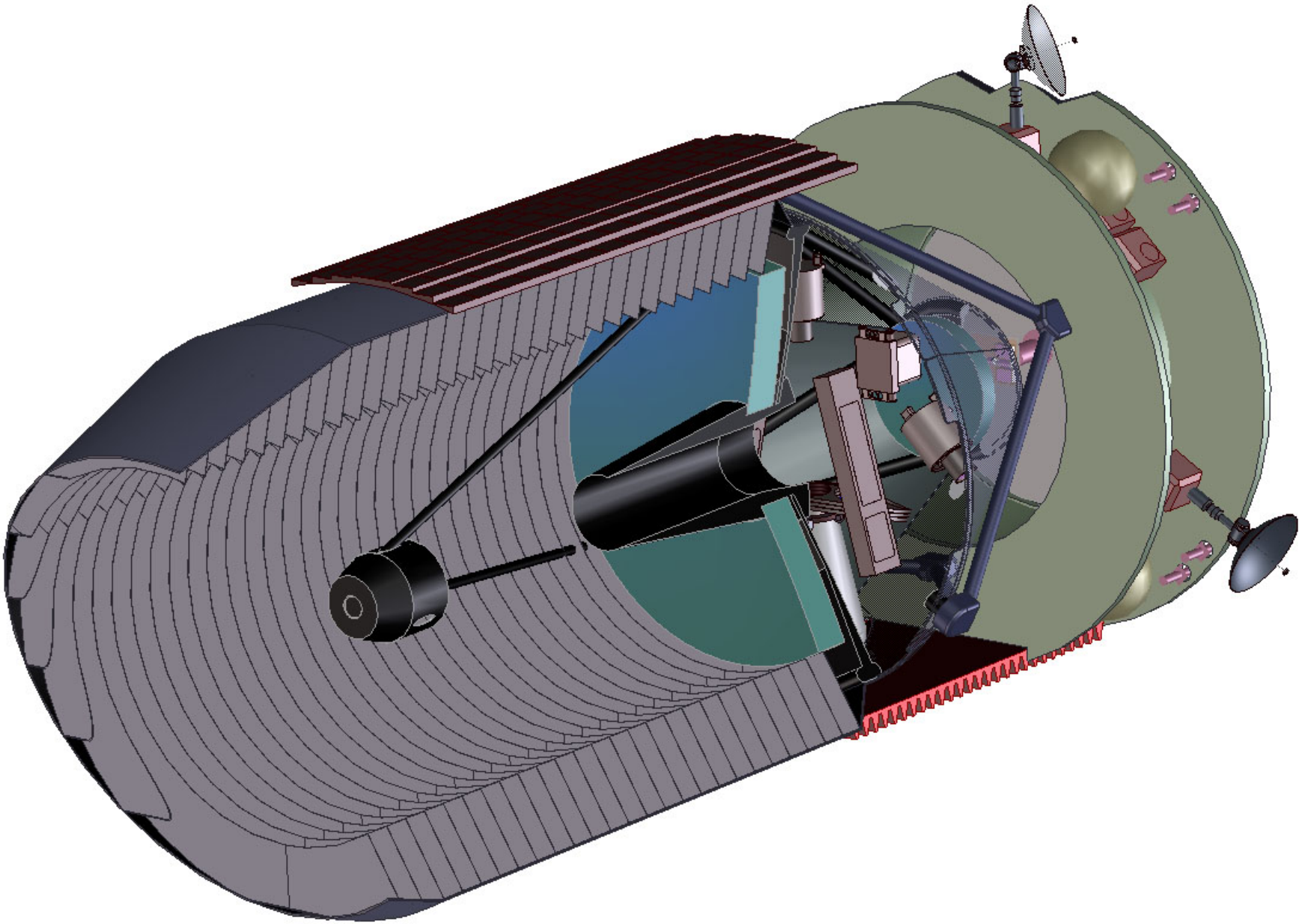

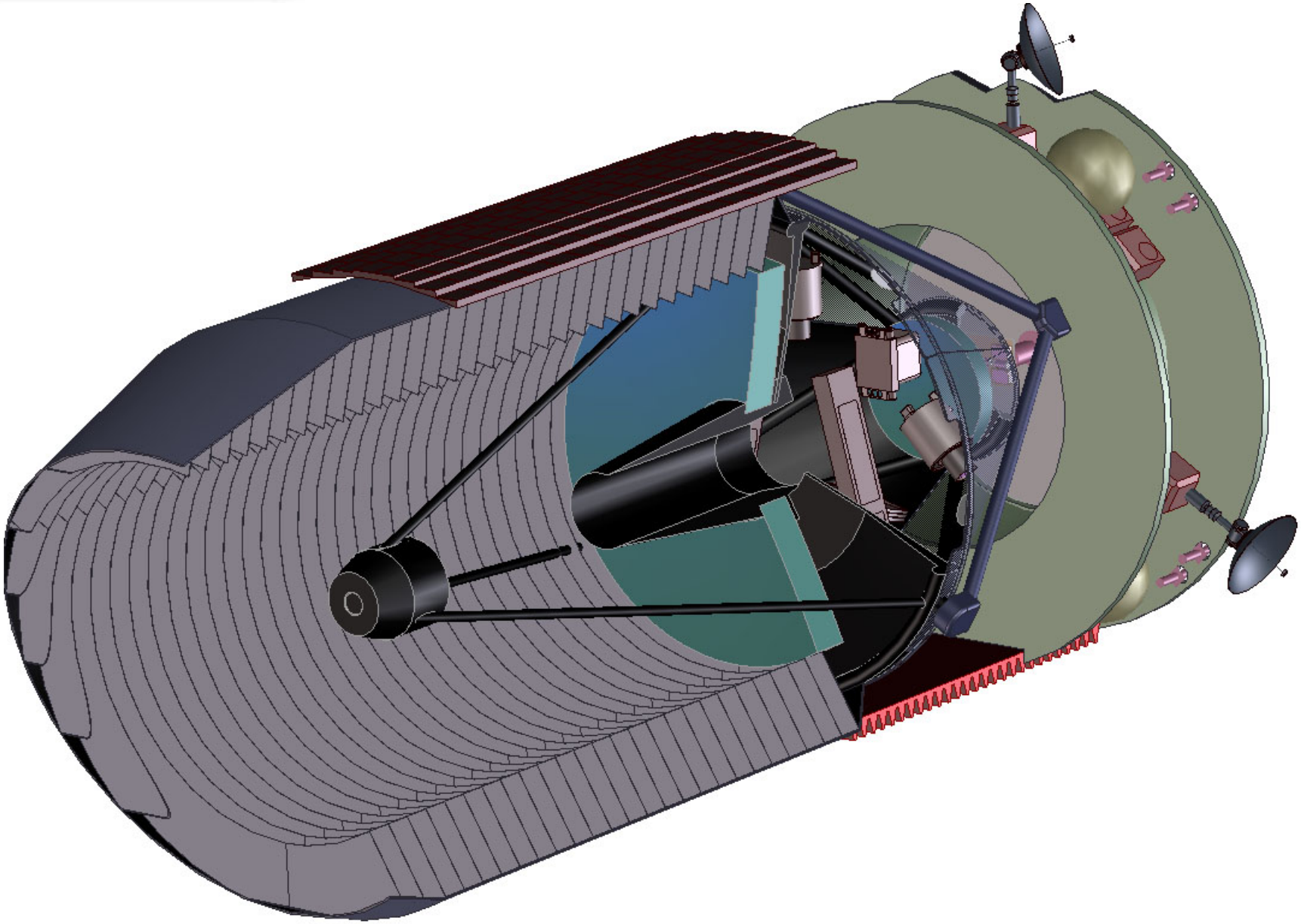
SNAP

SNAP

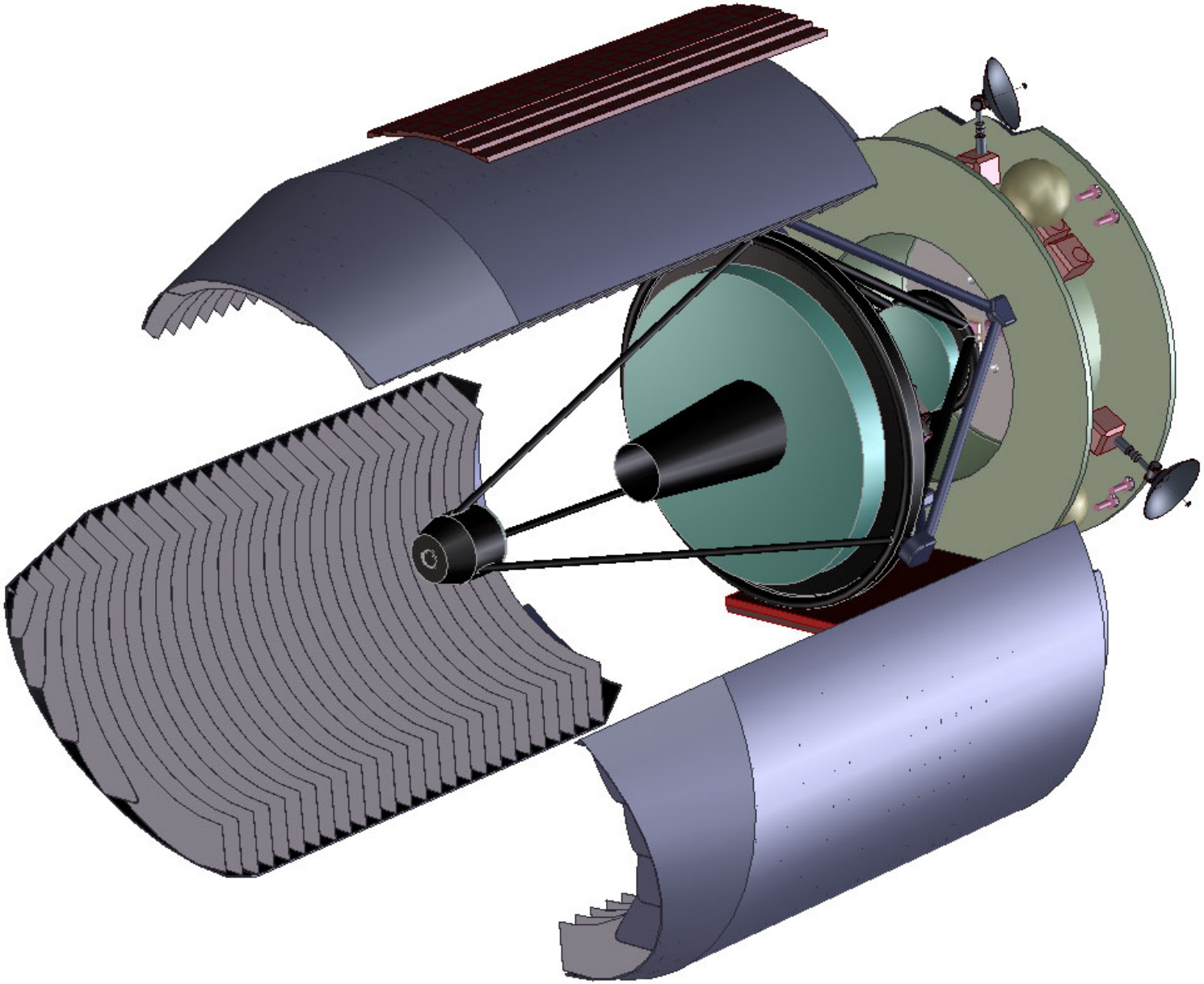

SNAP

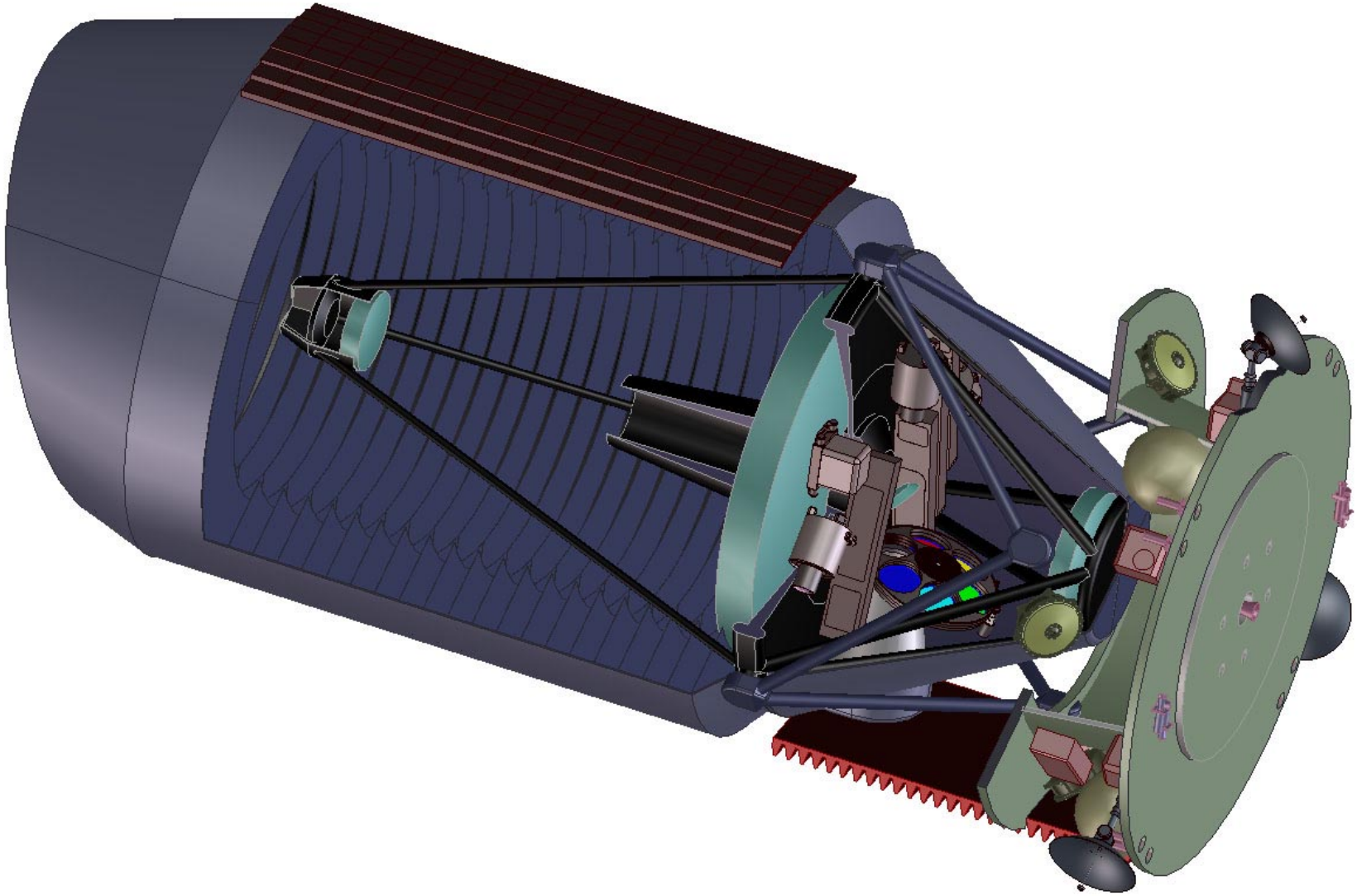
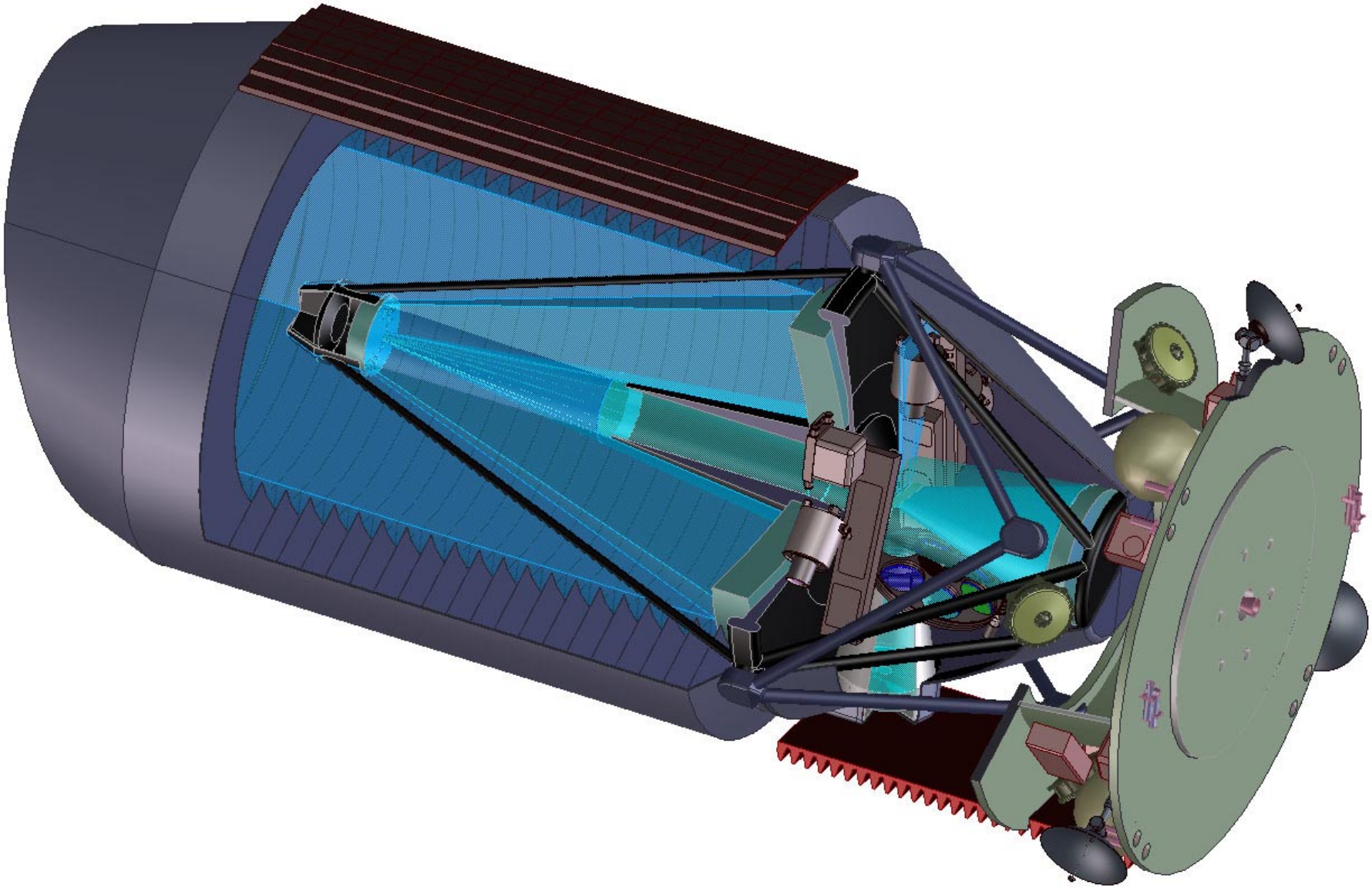
SNAP