DRAFT

Report on Preliminary Engineering Design Study for SNAP Stray Light Baffle and Baffle Contamination Cover

April 25, 2002

Prepared by Robert Besuner

Executive Summary

Finite element analyses have been performed for possible designs of the SNAP Stray Light Baffle and Baffle Contamination Cover. Modal analysis and strength analysis under steady-state accelerations were performed and design configurations iterated for three general constructions: predominantly fabricated aluminum sheet metal construction, predominantly thin-walled carbon fiber/cyanate ester matrix construction, and predominantly aluminum facing/aluminum honeycomb sandwich construction. In addition, carbon fiber facing on aluminum honeycomb was studied for the Baffle Contamination Cover. Results from these analyses include weights, fundamental natural frequencies, and stresses and buckling safety factors from steady state accelerations. These results, along with cost and other considerations are intended to help select a general design configuration for these two components of the SNAP spacecraft.

Two of the baffle configurations studied are made up of thin-walled sheet materials, while the other is comprised of aluminum face sheets bonded to an aluminum honeycomb core. The overall stiffness and strength of the assembly in the case of the thin-walled designs derives from shell stiffness owing to curvature of the components, along with reinforcement from adjoining components. Stiffness and strength of the sandwich construction comes largely from its intrinsically high bending resistance.

Table 1 lists approximate total weights required for each design configuration to meet minimum performance goals. These weights are currently intended for comparison purposes. The first three designs listed assume an expendable, lightweight contamination cover. The fourth design employs a two-piece, hinged, spring-loaded cover that opens once after launch. These first four designs were analyzed and iterated more thoroughly than the last. The 'fabricated aluminum/HST door' design incorporates a motorized, reclosable door that weighs the same as the Hubble Space Telescope's door system (~150 pounds). The weight of the reclosable door might be reduced, but for attitude control reasons, it must have a natural frequency 10 hertz or greater, opened or closed.

Design Configuration	Weight (lb)
Fabricated aluminum sheet metal	351
Aluminum honeycomb	305
Thin-walled carbon fiber	240
Fabricated aluminum/split one-shot door	387
Fabricated aluminum/HST door	~800

Table 1-Design Configuration Weight Comparison

If an expendable cover is used, any ejected parts or debris are required to re-enter within 25 years. This may necessitate ejecting the cover at an altitude lower than the mission's operational orbit. A possible design configuration for a cover mounting/ejection system utilizing Frangibolts is discussed in this report.

Table 2 summarizes the performance of the four design configurations studied. Safety factors are for worst-case quasi-static launch accelerations. Note that Algor modeling software cannot perform buckling analysis on sandwich materials.

Design Configuration	Fundamental natural frequency (hertz)	Safety factor on material failure	Safety factor on buckling
Fabricated aluminum sheet metal	36.5	6.7	5.8
Aluminum honeycomb	36.4	9.1	N/A
Thin-walled carbon fiber	42.5	4.1	4.4
Fab'd aluminum/split one-shot door	35.0 stowed, 15.4 deployed	7.4	5.0

Table 2-Design Configuration Performance Summary

Each of the design configurations can perform adequately. While the fabricated aluminum design is heavier than the other two designs, it should be a great deal simpler and less costly to produce. Sheet metal work is low-tech, and can be done by numerous vendors using relatively simple techniques, including shearing, bending, and riveting. Honeycomb sandwich construction and carbon fiber production are much more specialized, and fewer vendors may be available to choose from, particularly given the size of the baffle assembly. The sandwich and carbon fiber designs may require autoclaving and/or vacuum bagging and are likely to require numerous inserts to enable fastening. Post-fabrication modifications or repair may be very difficult as compared to sheet metal construction. These fabrication considerations may justify the greater weight of the fabricated aluminum configuration.

General description of the design and the goals for its performance

See Figure 5 for the general layout. The Stray Light Baffle as currently envisioned has the form of a hollow cylinder, ~2.5m in diameter, ~5.5m long, sliced at the aperture end on a plane 56.5 degrees from its axis. The aperture is formed by a flat sheet or plate in the slice plane. Nine baffle elements in the form of truncated cones occupy the inside of the front end of the baffle. The inside diameters of the baffles and the size of the aperture are defined by a truncated cone with an included angle of 1.5 degrees starting at the periphery of the Primary Mirror and expanding toward the aperture.

The aperture is to be covered during launch by a Baffle Contamination Cover. The cover/baffle interface is envisioned to be lightly gasketed to achieve good but not perfect light-tightness and dust sealing.

The geometry of the baffles is such that scattered stray light makes two bounces before reaching the Primary Mirror. This implies that the baffles nearest the aperture should be conical. The baffles nearer the Primary mirror need not be shaped the same as those near the aperture, but because of the desire to keep their natural frequencies higher, they retain the conical shape. The two-bounce requirement means that gusseting or other reinforcement of the baffles near the aperture should be on the aperture side of the baffle, while reinforcement of the baffles nearer the Primary Mirror should generally be on the side toward the Primary Mirror.

This study presumes that additional baffles closer to the Primary Mirror would be part of a component separate from the Stray Light Baffle. It is also assumed that the inside diameter of the Stray Light Baffle should be kept free of features to leave room for an additional baffle assembly and/or for features of the Secondary Mirror Support Structure. The actual configuration depends in large part on the configuration of the Secondary Mirror Support Structure. It should be noted that should the overall design configuration allow it, the stiffening ribs shown in the designs of this study could be placed inside the shell of the Baffle. The stiffening of the shell might also be achieved by integrating the full complement of baffles into the Stray Light Baffle itself, omitting separate stiffening features entirely.

The Baffle is expected to run at a temperature around 180 degrees K and will mount to the spacecraft, which will operate around 280 degrees K. For this reason, the mounting of the Baffle to the spacecraft must have limited thermal conductivity. For high stiffness and strength, and comparatively low thermal conductivity, titanium alloy mounts are assumed. These are assumed to be six round titanium alloy tubes, 2” in diameter, 1.5” long, with 0.05” thick walls, one of which, in its simplest form, is illustrated in Figure 1. Fastening details are to be determined. For a temperature difference of 100 degrees Celsius, the six mounts conduct a total of 25 watts.

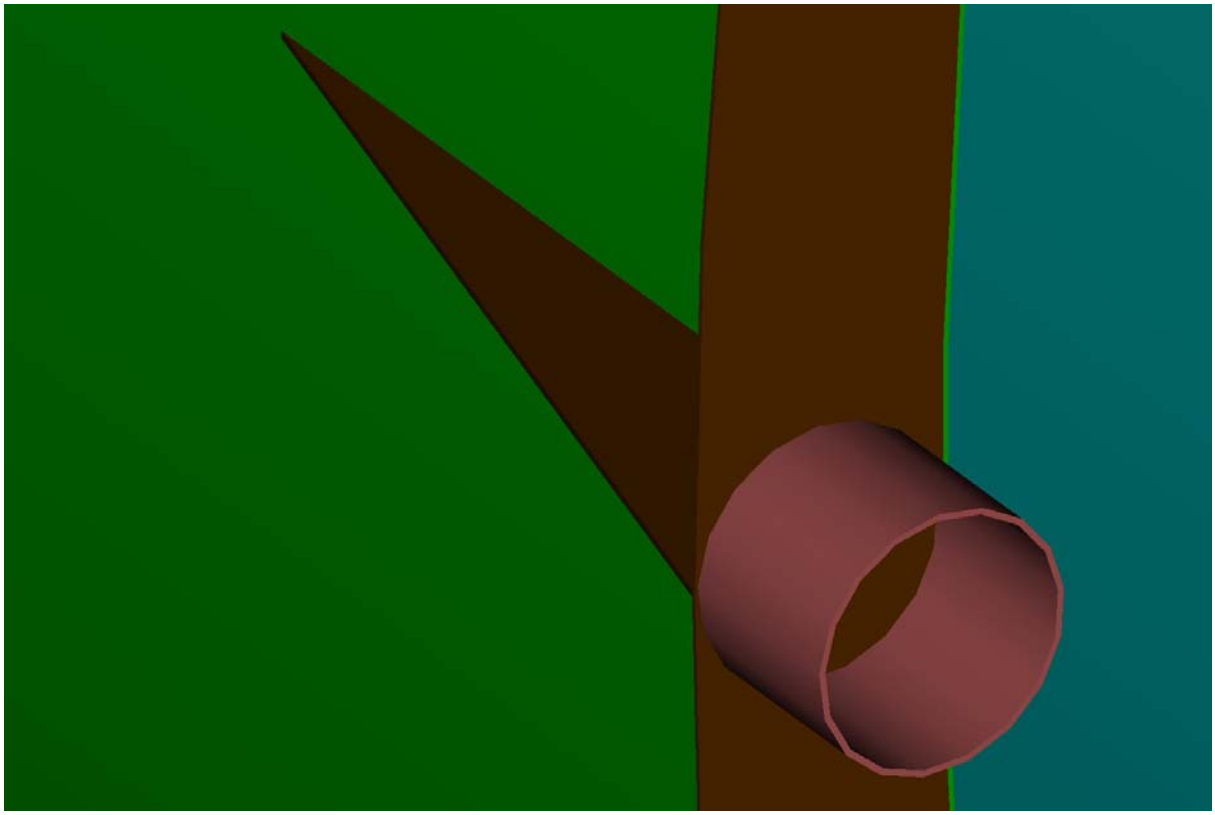

Figure 1-Thermal mount, base flange, and base flange gusset

For the purposes of this Engineering Study, the following performance goals are used:
-First mode natural frequency around 35 Hz or higher. This is to minimize coupling with Delta III/IV launch vehicle modes and to minimize fairing-to-spacecraft relative deflections, per the Payload Planners Guide.
-Adequate safety factors under quasi-static loading of 2.5 g's laterally, 5 g's axially or a combination of 2.5 g's laterally and 5 g's axially. Material failure is taken to mean Von Mises stresses exceeding yield stress for metals or maximum principal stresses exceeding tensile or the value of minimum principal stresses exceeding compressive strength for composite materials.
-Sufficiently high safety factors against buckling under quasi-static accelerations of 2.5 g's laterally, 5 g's axially or a combination of 2.5 g's laterally and 5 g's axially.
-Minimum weight for the general construction under consideration. This should not be taken to mean that the design is perfectly optimized, but that several iterations have been explored, and a low weight has been found that may be achieved without extraordinary efforts or unrealistic designs.

Analysis tools

Models were constructed and analyzed using ALGOR v12.00. The analysis types used were: Linear Mode Shapes and Natural Frequencies; Linear Static Stress; Linear Critical Buckling Load; and Weight and Center of Gravity. All elements are either plate or sandwich type elements.

The Weight and Center of Gravity tool was used to find total weights for each model.

The Linear Mode Shapes and Natural Frequencies module was used to find fundamental natural frequencies and to refine the models by subjective inspection of mode shape output.

The Linear Static Stress module was used to simulate quasi-static accelerations. Stresses were found from individually applied accelerations of 5 g's in the x direction, 2.5 g's in the y direction, and 2.5 g's in the z direction, as well as from combined accelerations of 5 g's in the x direction and 2.5 g's in the y direction.

The Linear Critical Buckling Load module provided buckling factors of safety from the following loading conditions: 5 g's in the x direction; 2.5 g's in the y direction; 2.5 g's in the z direction; and 5 g's in the x direction combined with either 2.5 or –2.5 g's in the y direction, whichever produces lower a lower factor of safety. The results of these analyses are also expressed in terms of g loads producing critical buckling loads by multiplying the applied accelerations by the factor of safety result. Note that no buckling analysis was done for the aluminum sandwich model because Algor cannot perform buckling analysis on sandwich-type elements.

Limitations of the current model

The current models are for conceptual and comparative purposes only. The following assumptions, limitations and simplifications should be noted:

-No joining details are modeled—elements are assumed continuously joined along edges without overlapping tabs. No fasteners, inserts, or closeouts are modeled.
-Aside from assumed masses for cover restraint/release hardware, no accounting is made for additional mass from MLI, coatings, or miscellaneous mechanical and electrical hardware.
-The solar cell/heat rejection array is represented by increasing the mass of the elements where the array is envisioned (a 2.4 meter tall x 100 arc-degree section at the base of the main cylinder of the baffle). No structure is modeled for the array (other than as dead mass), meaning it neither provides stiffening nor are its own natural frequencies explored.
-The current models include only the baffle, the cover, and the thermal mounts. The spacecraft end of the thermal mounts are rigidly fixed.
-The interface between the end of the baffle and the ejectable baffle contamination cover is modeled by sharing four common nodes, one each at the ends of the axes of the ellipse that forms the end of the baffle. The stowed split cover attaches at the ends of the long axis of the ellipse and at two points on either side of the ends of the short axis, meant to represent hinging points. These shared nodes act as ball joints, that is the nodes are constrained to translate together, but relative rotation is unconstrained. There is no effort to model the gasketed, contacting nature of the cover/baffle interface. The cover is free to deflect through the end of the baffle. This simplification eliminates the need to employ gap elements and is a conservative approach.
-The mesh density of the models in this study is fairly coarse, and no effort has been made to increase the density and determine when the model converges. The current study is primarily for baselining and comparing construction configurations.

Materials used

All aluminum components other than honeycomb are assumed to have the properties of 6061-T6 alloy. If alloy 7075-T73 aluminum were substituted for 6061-T6, the major results in this report would be nearly identical except the factor of safety for material failure for the aluminum honeycomb configuration would rise to nearly 8. The titanium used for the thermal mounts is Ti-6Al-4V (grade 5). All honeycomb is assumed to weigh 5 pounds per cubic foot and has the approximate properties of HexWeb 5052 4.5-1/8-10 honeycomb from Hexcel Composites. Carbon fiber is assumed a quasi-isotropic layup of K63712/CE-3 (cyanate ester matrix) from COI Materials—this material has roughly twice the effective modulus of aluminum with about 2/3 the density. The carbon fiber is modeled as an isotropic material so Algor can perform buckling analysis on it (Algor can do buckling analysis on isotropic plate elements only). As previously described, the solar array is represented by mass only. The mass rate of the solar array is assumed to be 3 kg/m^2, based on the construction of the arrays on the HESSI spacecraft, which is tabulated in Table 3.

Item	Areal density
0.004” thick paint	0.127 kg/m^2
0.008” thick carbon fiber/epoxy	0.310 kg/m^2
0.50” thick 3.1 lb/ft^3 honeycomb core	0.631 kg/m^2
0.008” thick carbon fiber epoxy	0.348 kg/m^2
0.006” thick RTV adhesive	0.190 kg/m^2
0.007” thick GaAs photovoltaic	0.946 kg/m^2
0.006” cover glass	0.339 kg/m^2
Total	2.891 kg/m^2

Table 3-HESSI solar array stack-up

Baffle Contamination Cover construction

Four basic concepts for the Baffle Contamination Cover were explored, both in the context of the baffle/cover assembly and with the cover alone. The four concepts are: planar aluminum face/aluminum honeycomb sandwich construction; planar carbon fiber face/aluminum honeycomb sandwich construction; bulging aluminum shell; and bulging carbon fiber shell. The findings are fundamentally that for the baffle/cover system as a whole, as long as the cover itself does not ring, the lightest possible cover is preferred. The bulging carbon fiber shell configuration emerges from this study as the clear winner, as it provides adequate stiffness along with lighter weight than practical designs using the other options.

For stiffness and lightness, the ejectable Baffle Contamination Cover is modeled as an outwardly bulging curved shell with a rectangular box section around its circumference as a stiffening frame. The overall shape of the cover is elliptical, 118” long by 98” wide. A few iterations of modal analysis of the cover alone indicated that the highest natural frequency was achieved with a bulge of about 10”. Because the bulged cover is comprised of a compound curve, and because the mass of the cover contributes significantly to the fundamental cantilevered mode of the baffle, this design lends itself to being constructed using carbon fiber. A formed aluminum cover would be heavier and would require some sort of mold anyway, and the use of composite material largely obviates the need to compensate for springback and residual stresses from forming. Thermal tape applied to the outside

surface of the carbon fiber cover would both assist with thermal control and help resist contamination through the possibly porous composite material.

The same ejectable bulging carbon fiber cover design was used with each of the three Stray Light Baffle design configurations. This cover configuration is illustrated in Figure 2, with a section removed to show the frame cross-section. The cover consists of a bulging central portion, surrounded by a hollow rectangular frame, 0.75” wide by 2” tall. All the material is 0.030” thick carbon fiber/cyanate ester. The portions of the restraint/release mechanisms attached to the cover are modeled as plates spanning the rectangular frame section at the ends of both the long and short axes of the ellipse shape. One half pound of dead weight is attributed to each of these locations in the cover (visible in yellow). The total weight of this cover, including restraint/release hardware in the cover is 25.2 pounds.

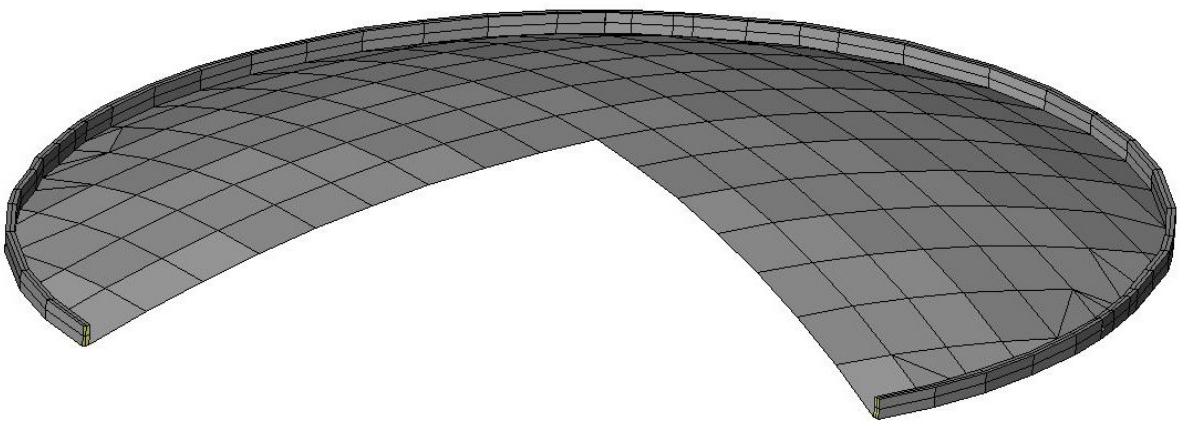

Figure 2—Ejectable baffle cover

A two-piece, hinged cover design was analyzed with the predominantly fabricated aluminum Stray Light Baffle design configuration. One half of this cover is illustrated in Figure 3. The split design requires stiffening both to gain back some stiffness for the launch environment, and also to meet the minimum deployed natural frequency on orbit of 10 hertz. The design is essentially the same as the ejectable cover, but split along the long axis, and stiffened with 2” tall ribs as shown. The gray ribs, like the bulging portion and rectangular frame, are 0.030” thick, while the green ribs are 0.060” thick. This cover has a restraint/release mechanism (in yellow) at both ends of the split line and hinge points approximately 12” to either side of the end of the ellipse short axis (near where the green ribs meet the rectangular frame). The hardware at each of these points is modeled using plates within the rectangular frame section, one half pound at each location. In the stowed position, the cover is attached to the baffle at each hinge point and at each restraint/release point. In the deployed, open position, the cover is attached to the baffle at the hinge points and at the top of the intersection of the two green ribs, which is in contact with the side of the baffle. Both halves of this cover and the hinge and restraint hardware in the cover halves weigh a total of 31.4 pounds.

The specifics of the ejection/deployment schemes for these covers are discussed later in this report.

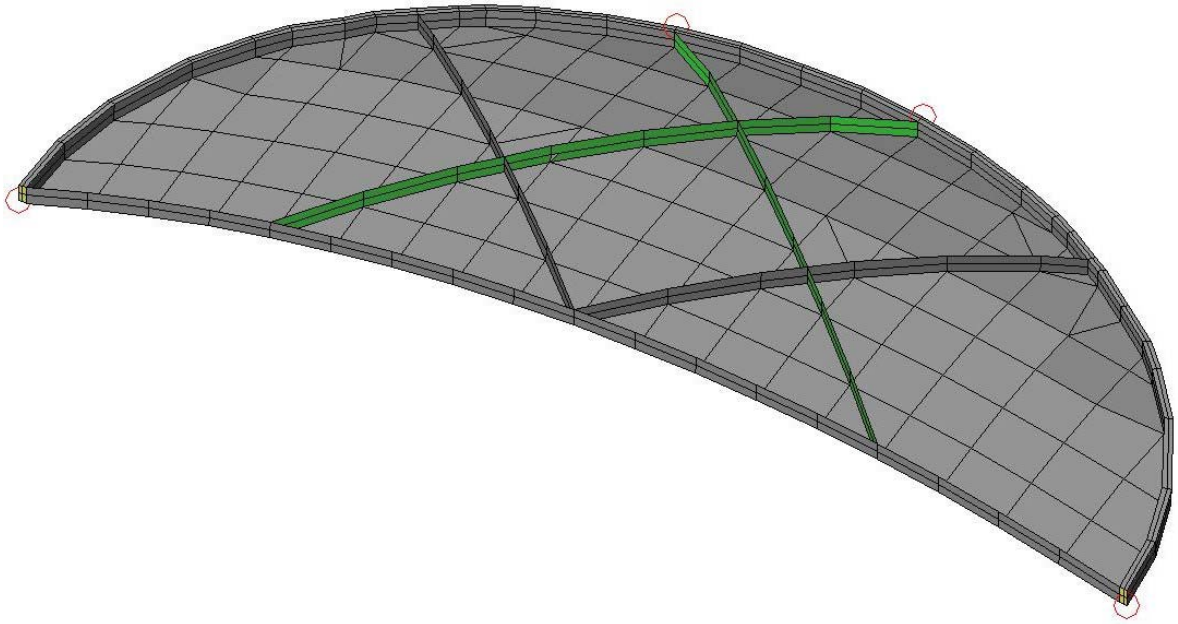

Figure 3—Split Baffle Cover

Stray Light Baffle configurations

Numerous iterations and explorations for each construction type were explored until a lightweight design meeting the performance goals was found. The best designs found for each construction method are described in the paragraphs below, followed by Table 4, summarizing the results of finite element analyses of those designs. Note that all the maximum stresses from quasi-static accelerations were in or near the titanium mounts. The coordinate system of the finite element model has the xy plane as the plane of symmetry of the baffle, with the x axis as the optical axis, positive from the aperture toward the Primary Mirror.

Predominantly fabricated aluminum baffle model/ejectable cover

Figures 4 and 5 illustrate this model. Note that the area where the solar array is located is comprised of materials with higher densities to represent the additional weight of the arrays. The shell of the baffle is comprised of 0.040” aluminum for the 47” of its length nearest the Primary Mirror (in purple [array] and dark blue), and 0.030” aluminum for the remainder of its length (in green [array] and cyan). For 71” of its length at the base, the shell is stiffened by an array of external aluminum ribs, 2” tall by 0.040” thick (in brown). The outermost (flat) baffle is 0.060” thick aluminum (in red), with a 2” tall by 0.060” thick stiffening rib (in magenta) roughly 2/3 of the way from the baffle shell to the aperture. The baffles are formed by 0.020” thick aluminum conical sections, with additional 0.020” reinforcement forming a triangular ‘box’ (in yellow). Because of the scattered light two-bounce requirement, the reinforcements are on the aperture side of the outermost three baffles, and on the Primary Mirror side for the other six baffles. The reinforcements on the baffles, flange on the end baffle, and latticework at the base of the shell all act to stiffen their respective adjuncts. In

addition, the junctions between the inner baffles and the end baffle and between the inner baffles and the shell serve to stiffen the end baffle and shell.

The first two modes are shown in Figures 6 and 7. The first vibration mode at 36.5 hertz consists of overall cantilevered oscillation in the xz plane, coupled with 'potato chip' oscillations of the baffle cover. The second mode at 36.8 hertz has overall cantilevered oscillation in the xy plane, coupled with deflections of the flat, flanged end baffle and the baffle cover.

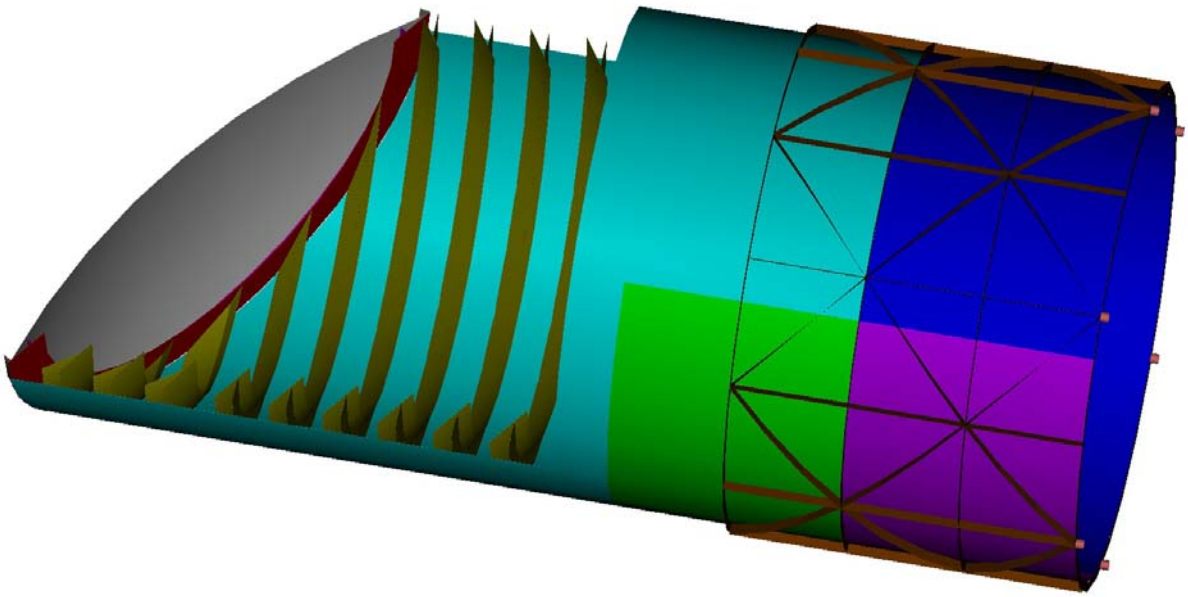

Figure 4—Cutaway view of fabricated aluminum baffle

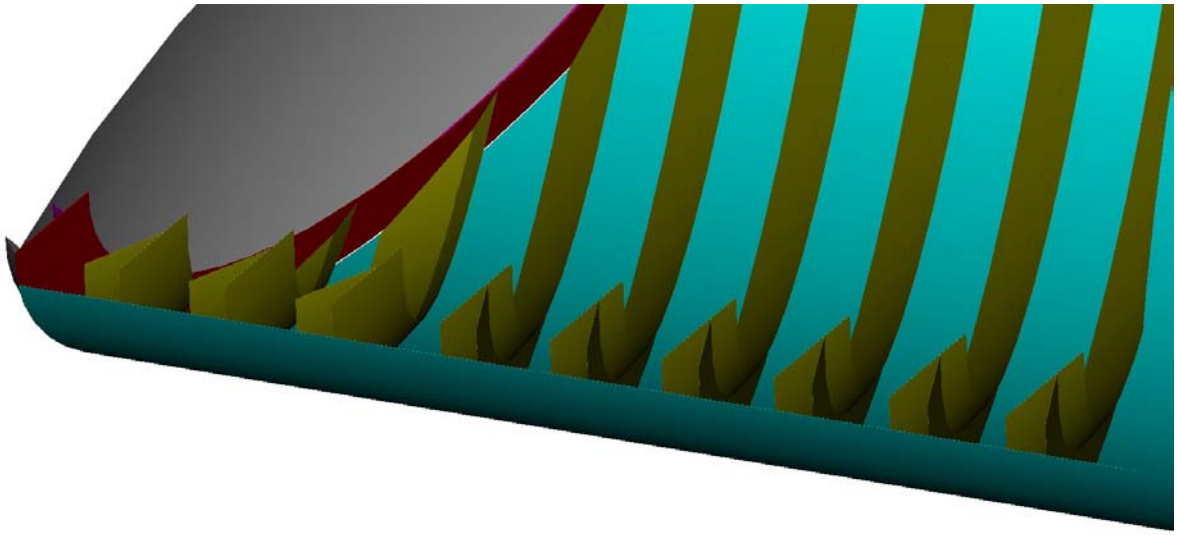

Figure 5-Closeup of cutaway fabricated aluminum configuration showing baffles

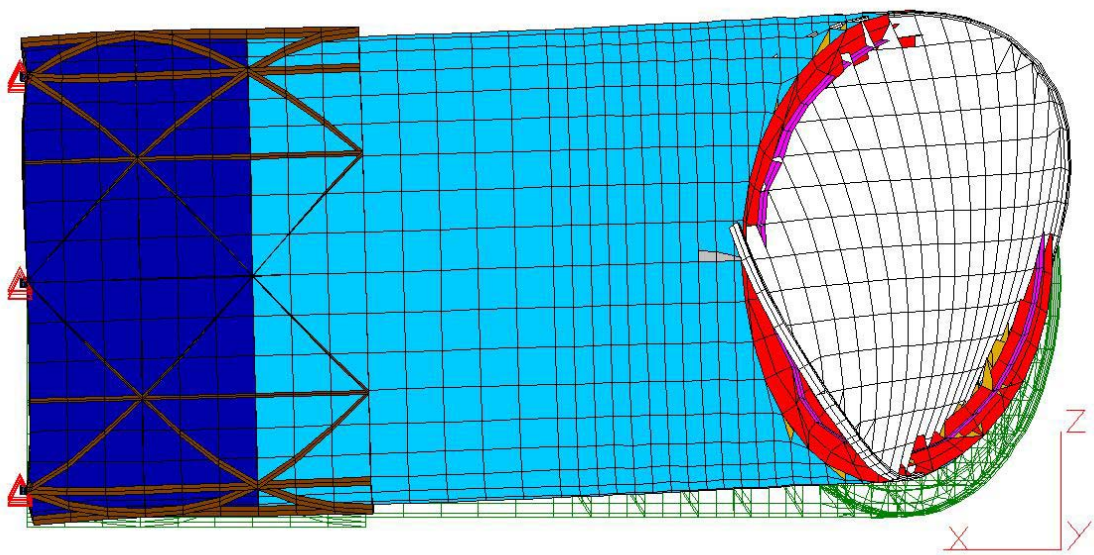

SVIEW 12.0 baffle23 04/23/102 11:30 LC 1/ 8 Vu= 3 Lo=180 La= 0 R= 0

Figure 6- First mode for fabricated aluminum baffle with ejectable cover, undisplaced mesh in green, 36.5 hertz

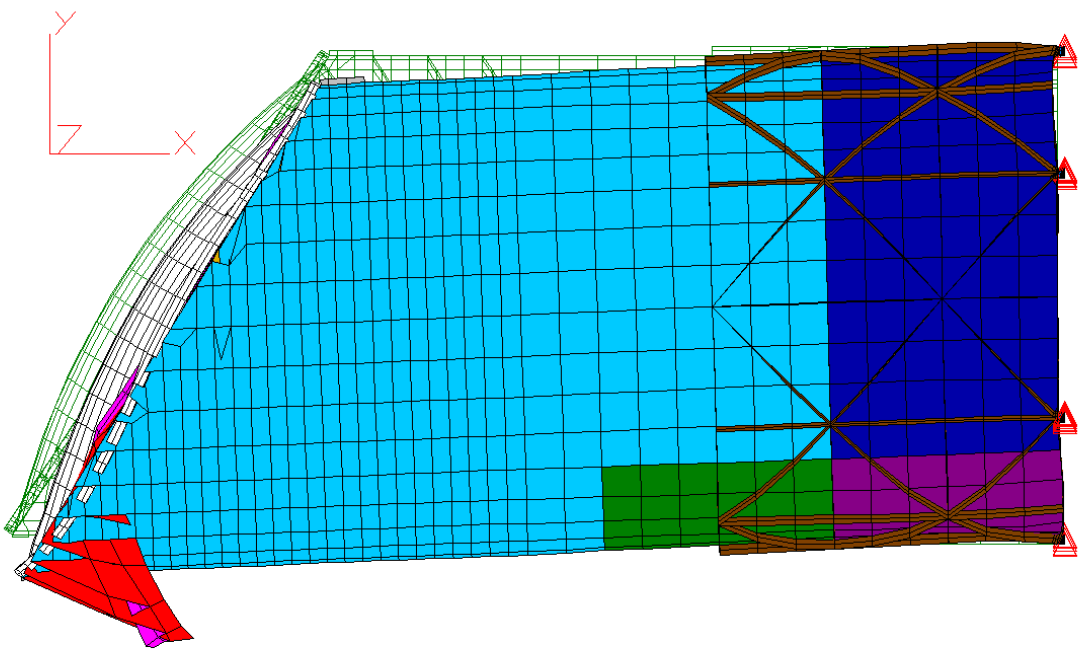

SVIEW 12.0 baffle23 04/23/102 11:30 LC 2/ 8 Vu= 1 Lo= 0 La= 90 R= 0

Figure 7- Second mode for fabricated aluminum baffle with ejectable cover, undisplaced mesh in green, 36.8 hertz

Predominantly aluminum honeycomb baffle construction

Figures 8 and 9 illustrate this model. The shell of the baffle is constructed with 0.020" aluminum face sheets on 0.30" thick core for its first 47" of length (in gray [array] and purple), and with 0.010" aluminum face sheets on 0.30" thick core for the remainder of its length (in green [array] and cyan). An aluminum base flange 2" tall and tapered gussets, all 0.125" thick (in brown) stiffen and reinforce the mounting area. The outermost (flat) baffle has 0.010" aluminum face sheets on 0.30" thick core (in red). The baffles are made from 0.008" aluminum face sheets on 0.25" thick core (in yellow). Due to the stiffness of the sandwich materials, the end baffle and inner baffles do not require additional stiffening. The innermost four baffles are flat as opposed to conical. These baffles act to significantly stiffen the shell, and need not be conical for stray light reasons. The fundamental natural frequency of the baffle is essential independent of core thickness for core thicknesses between around ¼" and around ¾", while total weight increases dramatically with core thickness.

The first two modes are shown in Figures 10 and 11. The first vibration mode at 36.4 hertz consists of overall cantilevered oscillation in the xz plane, coupled with 'potato chip' oscillations of the baffle cover. The second mode at 37.6 hertz has overall cantilevered oscillation in the xy plane, coupled with 'potato chip' oscillations of the baffle cover.

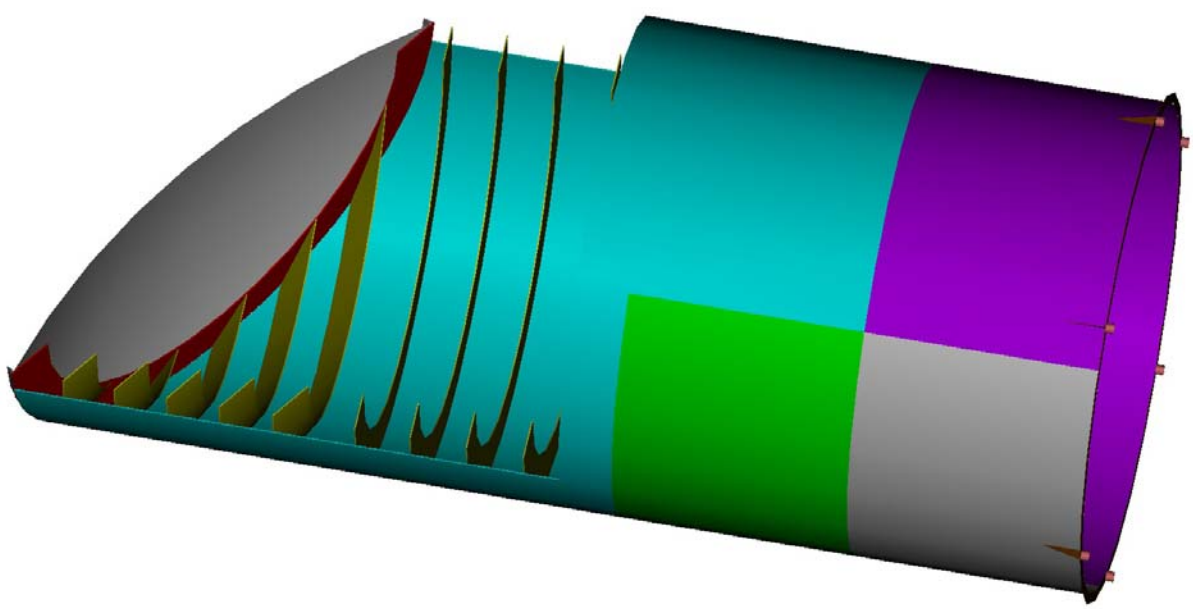

Figure 8—Cutaway view of aluminum sandwich baffle

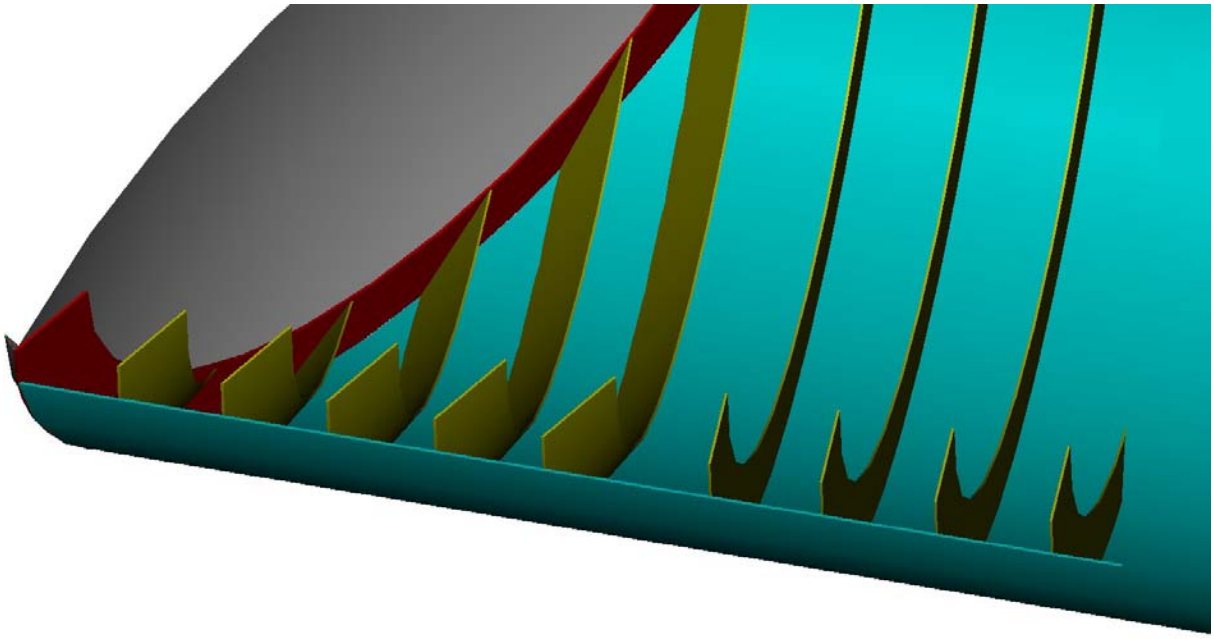

Figure 9- Closeup of cutaway aluminum honeycomb configuration showing baffles

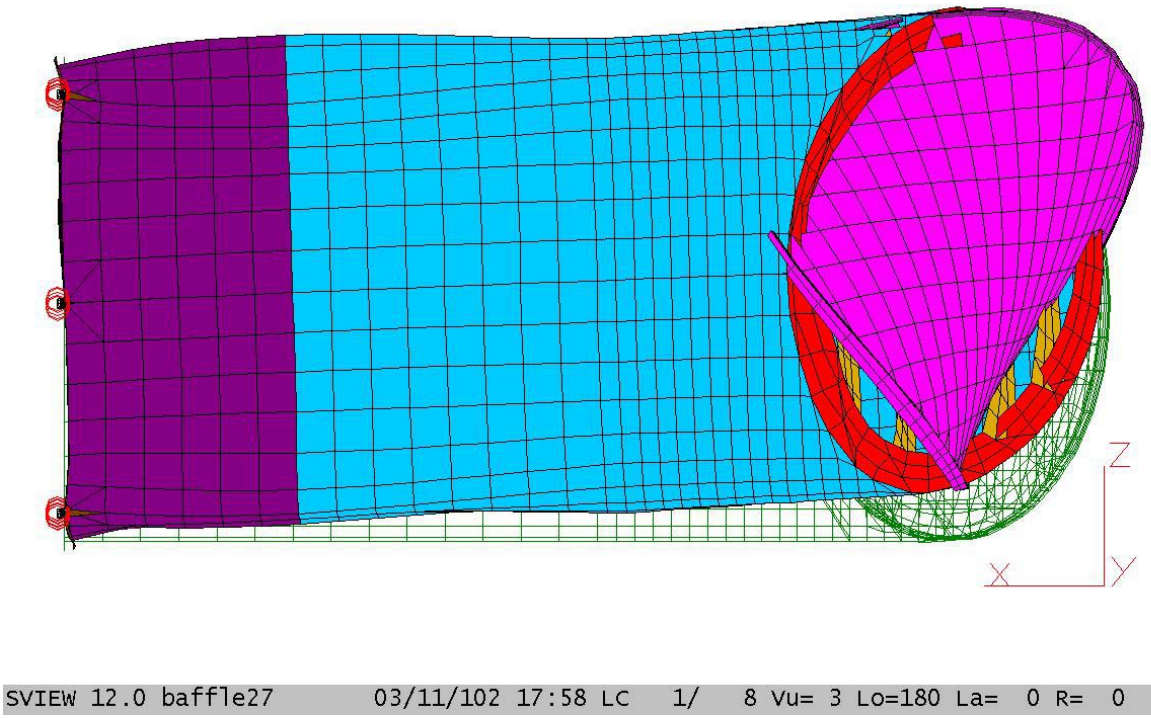

Figure 10- First mode for aluminum honeycomb baffle, undisplaced mesh in green, 36.4 hertz

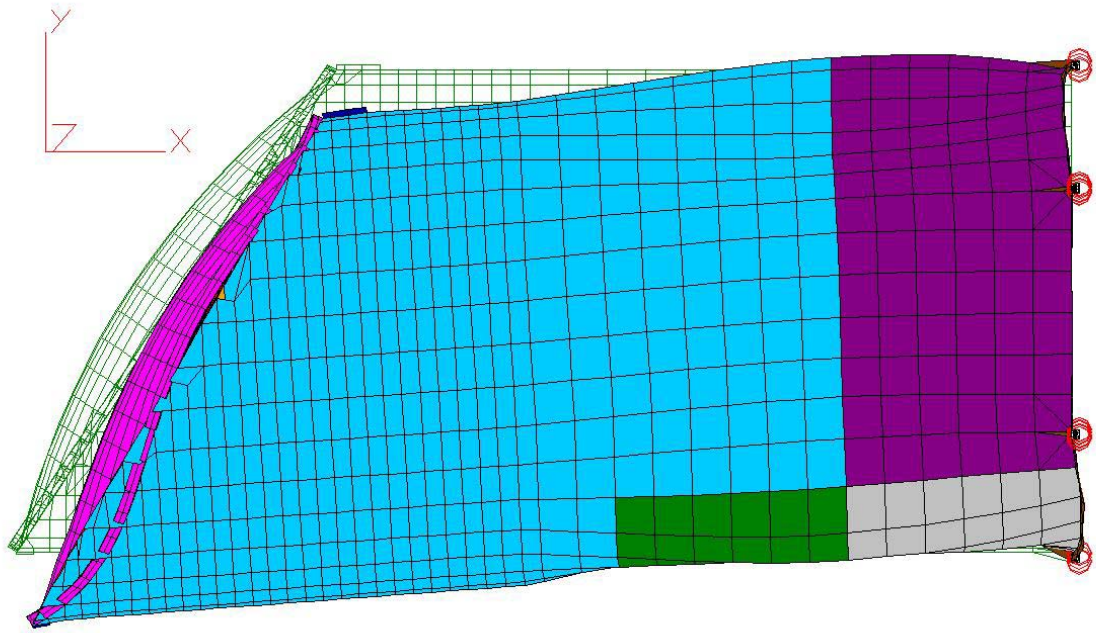

SVIEW 12.0 baffle27 03/11/102 17:58 LC 2/ 8 Vu= 1 Lo= 0 La= 90 R= 0

Figure 11-Second mode for aluminum honeycomb baffle, undisplaced mesh in green, 37.6 Hz

Predominantly thin-walled carbon fiber baffle construction

Figures 12 and 13 illustrate this model. The entire shell of the baffle, the flat end baffle, and the end baffle stiffening flange are 0.030" thick carbon fiber/cyanate ester. The baffle is reinforced with three circumferential bands 2" tall and six tapered gussets at the thermal mounts, all 0.060" carbon fiber/cyanate ester. These reinforcing bands provide stiffness against modes in which the shell takes an oval shape. The baffles are made of 0.020" carbon fiber/cyanate ester, configured identically to those in the fabricated aluminum model. As a practical matter, note that if the shell were made from cured, flat material, then subsequently curved, induced bending stresses would be around 6.2 ksi—approximately one fifth the compressive strength and one twelfth the tensile strength of the material. If the baffles and gussets were made from flat material, then curved, the smallest radius required would induce bending stresses around 3.7 ksi.

Figures 14 and 15 show the first two modes. The first vibration mode at 42.5 hertz consists of overall cantilevered oscillation in the xy plane, coupled with deflections of the flat, flanged end baffle and the solar array elements oscillating between the reinforcing bands. The second mode at 43.7 hertz has overall cantilevered oscillation in the xz plane, coupled with 'potato chip' oscillations of the baffle cover and the solar array elements oscillating between the reinforcing bands.

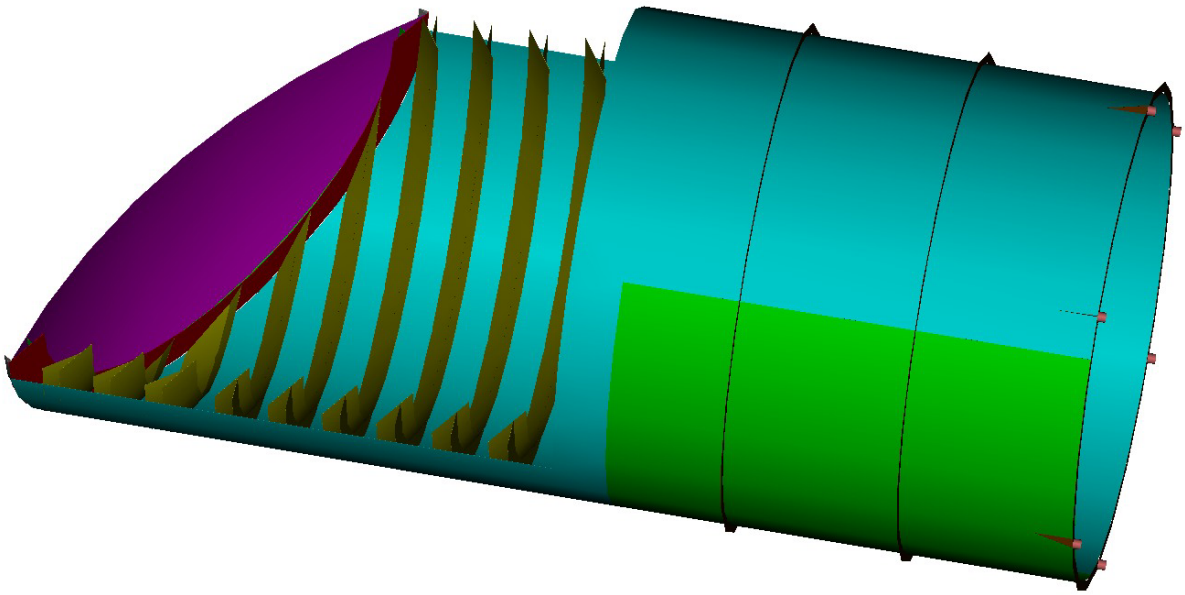

Figure 12—Cutaway view of carbon fiber baffle

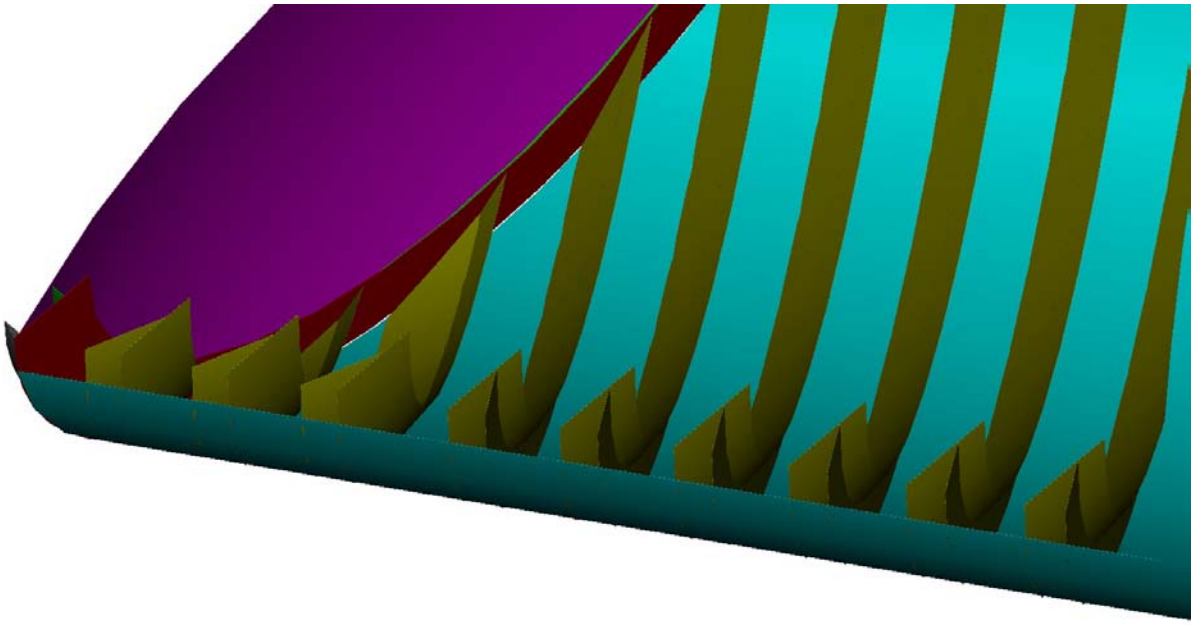

Figure 13- Closeup of cutaway carbon fiber configuration showing baffles

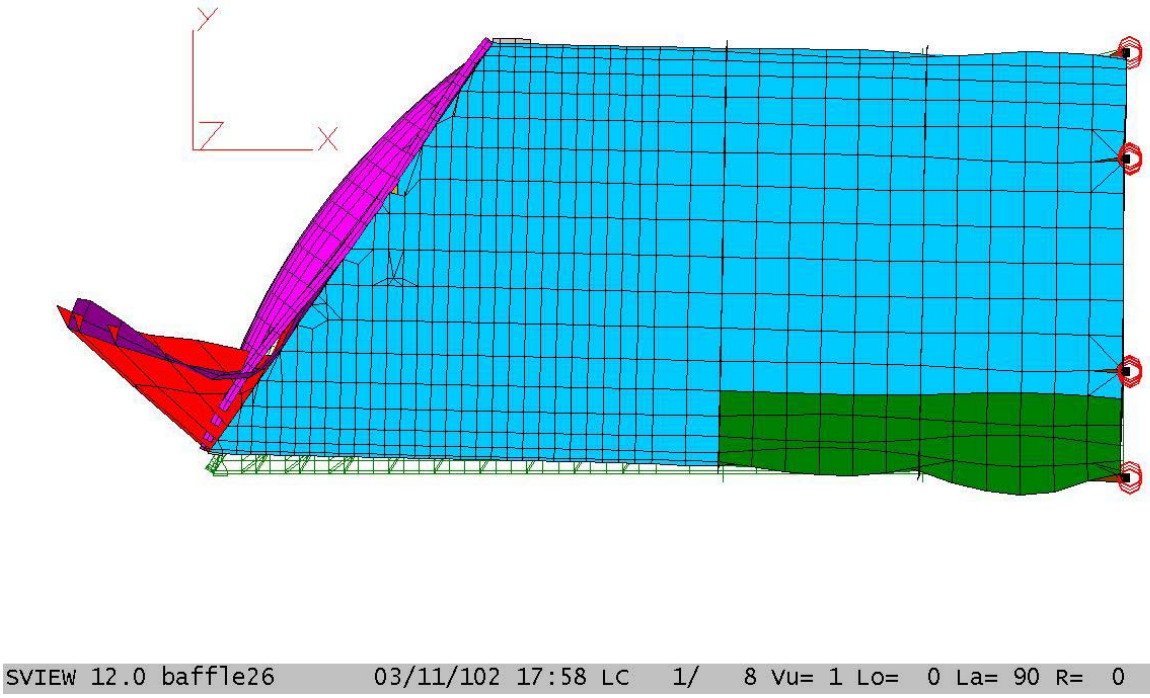

Figure 14- First mode for carbon fiber baffle, undisplaced in green, 42.5 hertz

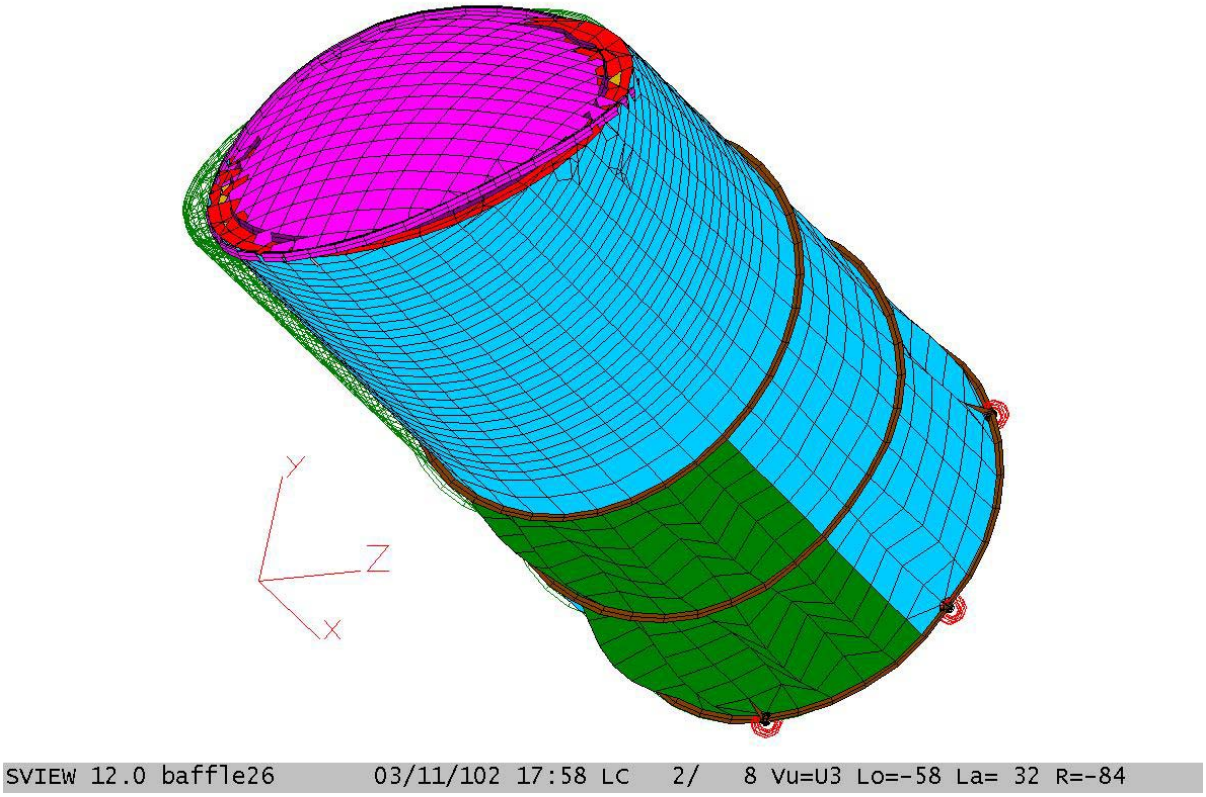

Figure 15- Second mode for carbon fiber baffle, 43.7 hertz

Predominantly fabricated aluminum baffle model/hinged, split cover

This model is the same as the fabricated aluminum baffle with the following exceptions: The raised ribs at the base end of the shell are 0.060” thick, as opposed to 0.040”; the aluminum comprising the base end of the shell is 0.050” thick instead of 0.040”; hinge mass dummies and cover travel stop mass dummies are added; and the cover itself is replaced with the split design. Modal analyses are done for both stowed and deployed configurations.

The first two modes for the stowed configuration are shown in Figures 16 and 17. The first mode at 35.0 hertz consists of cantilevered rocking in the xy plane, coupled with deflections of the flanged end baffle and opening and closing of the cover along the split axis. The second mode at 39.6 hertz is primarily cantilevered, rocking oscillation in the xz plane.

The first two modes in the deployed configuration are shown in Figures 18 and 19. The first mode at 15.4 hertz has the cover halves rocking and bending on their mounts in tandem with each other. The second mode at 15.6 hertz is similar to the first, but with the cover halves oscillating roughly as mirror images of each other.

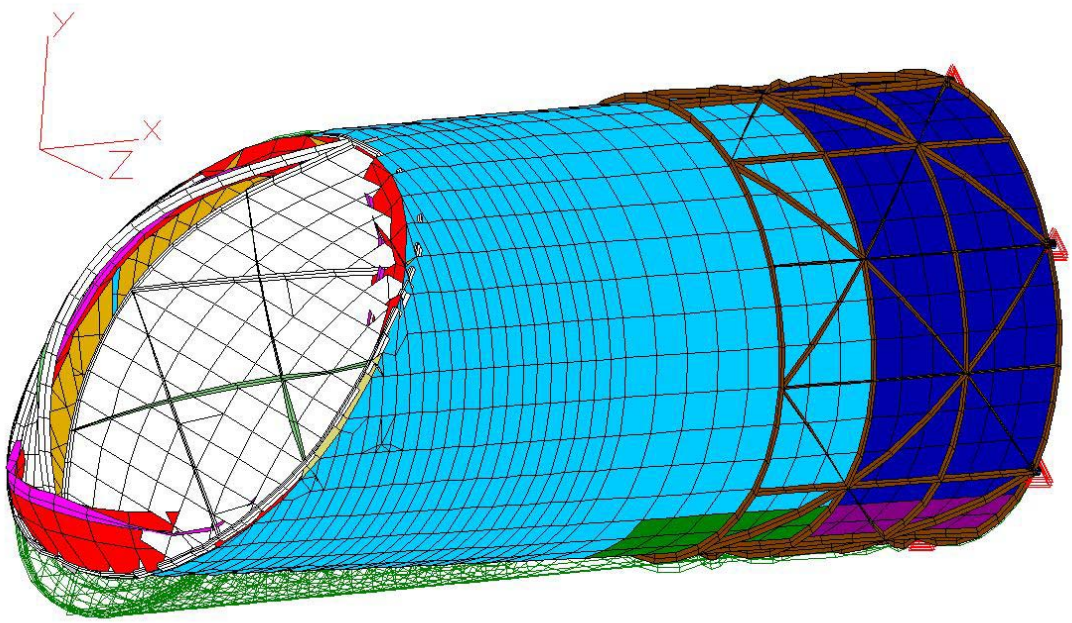

SVIEW 12.0 baffle25 04/23/102 11:30 LC 1/ 8 Vu=U1 Lo=-115 La= 54 R=-115

Figure 16-First mode for fabricated aluminum baffle with closed, split cover, undisplaced mesh in green, 35.0 hertz

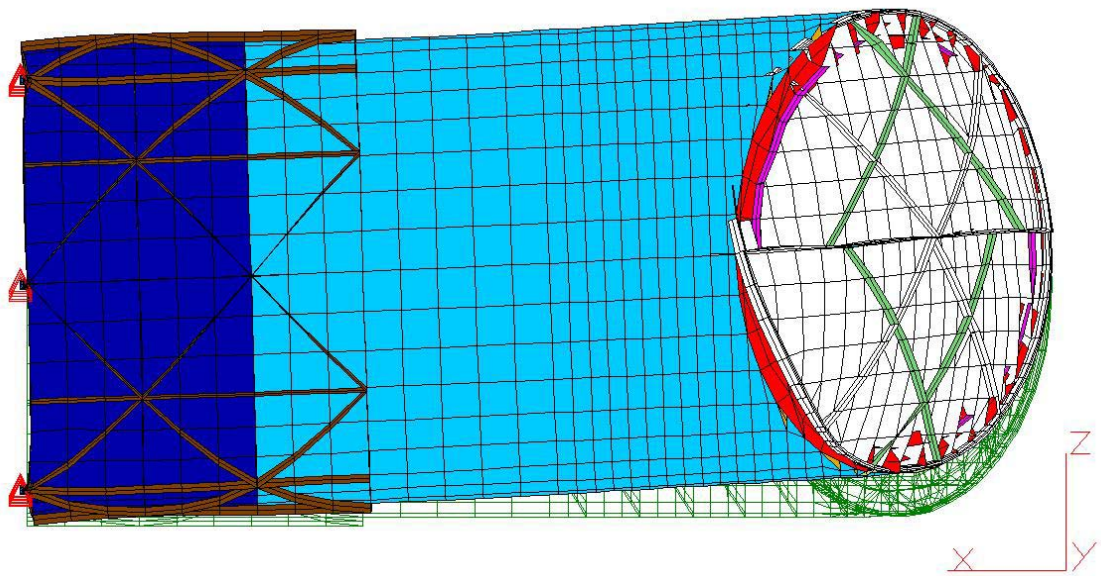

SVIEW 12.0 baffle25 04/23/102 11:30 LC 2/ 8 Vu= 3 Lo=180 La= 0 R= 0

Figure 17 - Second mode for fabricated aluminum baffle with closed, split cover, undisplaced mesh in green, 39.6 hertz

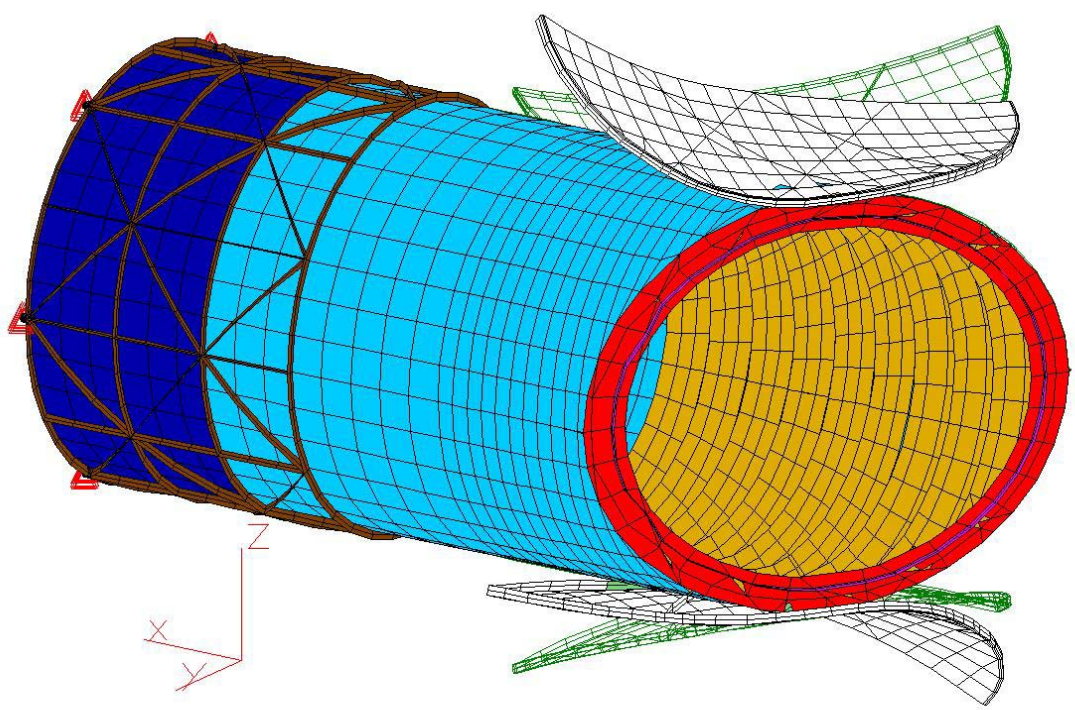

SVIEW 12.0 baffle24 04/23/102 11:30 LC 1/ 8 Vu=U3 Lo=-146 La= 18 R= 0

Figure 18 - First mode for fabricated aluminum baffle with open, split cover, undisplaced mesh in green, 15.4 hertz

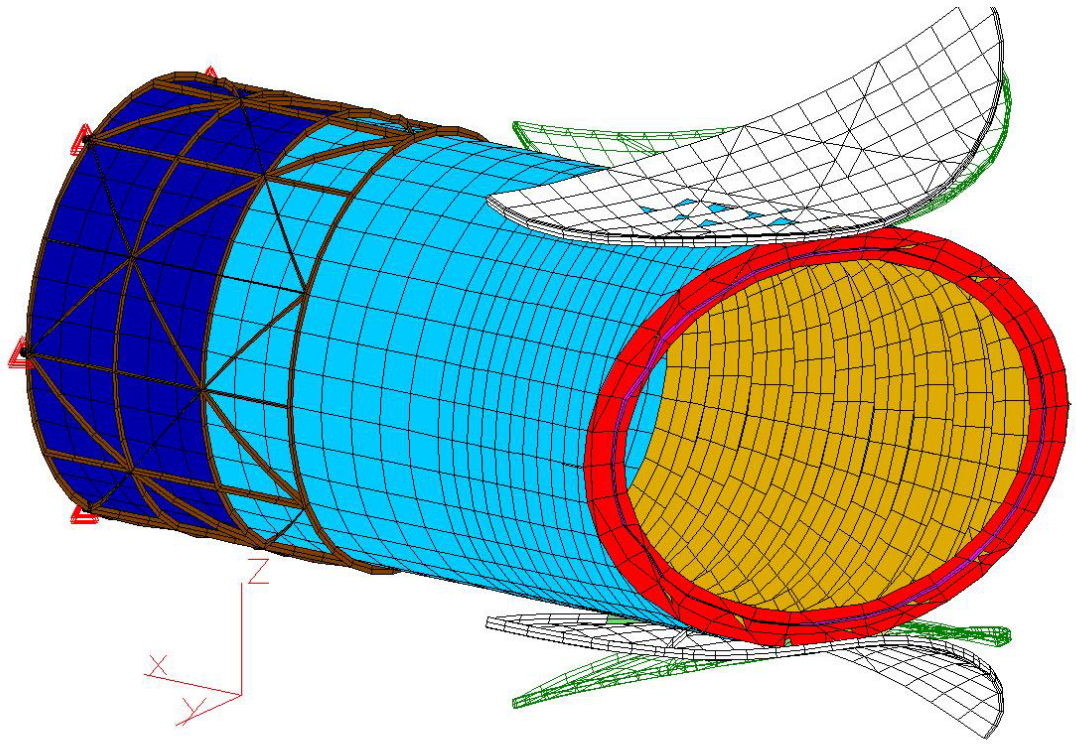

SVIEW 12.0 baffle24 04/23/102 11:30 LC 2/ 8 Vu=U3 Lo=-146 La= 18 R= 0

Figure 19 - Second mode for fabricated aluminum baffle with open, split cover, undisplaced mesh in green, 15.6 hertz

		ejectable cover			retained cover
		fab'd Al	Al sandwich	carbon fiber	fab'd Al
	total weight, incl. array, cover, mounts (lb)	351	305	240	387
	fundamental natural frequency (hertz)	36.5	36.4	42.5	35.0 dep'd, 15.4 stowed
material failure safety factors in Ti thermal mount from accelerations	5g x-direction	13.3	30.5	13.3	13.8
	2.5g y-direction	8.7	21.7	8.3	9.4
	2.5g z-direction	10.0	23.3	9.6	11.3
	5g x-direction, 2.5g y-direction	6.7	16.6	6.6	7.4
material failure safety factors in Al or carbon fiber from accelerations	5g x-direction	14.8	16.7	24.7 tens, 8.1 comp	16.7
	2.5g y-direction	9.8	10.8	11.2, 5.3	11.4
	2.5g z-direction	11.1	12.5	13.0, 6.0	13.8
	5g x-direction, 2.5g y-direction	7.5	9.1	12.5, 4.1	9.3
buckling safety factors from accelerations	5g x-direction	17.0	na	6.6	8.9
	2.5g y-direction	9.4	na	13.1	11.2
	2.5g z-direction	11.6	na	10.7	81
	5g x-direction, 2.5g y-direction	5.8	na	4.4	5.0

Table 4—Summary of baffle FEA results

Ejectable Baffle Contamination Cover mounting/release scheme

TiNi Aerospace, Inc., of San Leandro, California manufactures shape memory alloy actuated frangible bolt systems using the trade name Frangibolt. These systems employ a notched bolt or stud clamping within its grip the components to be restrained/released and a Frangibolt Actuator. The Frangibolt Actuator contains a cylinder of shape memory alloy and redundant resistive heaters. When current is applied to the heater(s), the shape memory alloy cylinder lengthens and fractures the notched bolt, releasing the joint. The actuator can be reused and is reset by compressing the cylinder using a fixture. A Switch-Washer may be installed within the grip to provide feedback that the Frangibolt has separated. Example product information sheets and space heritage information are included as Appendix A.

The size and shape of the Baffle Contamination Cover lends itself to mounting using four restraint points. A likely restraint/release system would employ two Frangibolt components at each mounting point, installed in series for redundancy. An implementation of this concept is illustrated in Figure 20. One actuator is mounted to the Baffle Cover, and one is mounted to the Stray Light Baffle. The frangible stud is double-ended, with one end skewering the cover-side actuator and the other end skewering the baffle-side actuator. Each end utilizes a switch-washer to indicate when that end of the stud has fractured. Clamping force comes from a retaining nut at each end. The ends are enclosed in covers, which both protect the components and retain debris.

The double-tapered plug that comprises the middle of the frangible stud nests into tapered bores on flanges mounted to the cover and the baffle and compresses a spring into each of the flanges. The springs are fastened to their respective flanges so they do not become debris. When either side of the frangible stud is fractured, the cover side of the actuator is free of the baffle side. The compression spring on the fractured side of the stud applies gasket-separation and kick-off force.

To prevent the double-tapered plug comprising the middle of the stud from becoming loose debris, only one side of the frangible stud should be fractured. This is why the switch-washers are employed. The secondary side should be actuated only if the primary fails.

An important consideration for the use of multiple Frangibolts and Frangibolt Actuators in the cover release mechanism is the actuation time for each actuator, which will be on the order of one minute. It may be expected that actuation times for individual actuators will vary by seconds and possibly by tens of seconds. Therefore, to avoid binding or undesirable release dynamics, the release scheme should either be insensitive to different actuation times or should employ a specified sequence of individual mounting point releases.

Figure 21 shows a release scheme in which each mounting point is released individually, and the Baffle Cover is kicked off with well-controlled speed and direction. First, the two mounting points on the short axis of the cover are released, one at a time, employing the feedback from the switch washers to ensure release has occurred. Next, the restraint at the end of the cover furthest from the Primary Mirror is released. A torsion spring at the un-actuated release point rotates the cover until its long axis parallels the axis of the baffle. When the last restraint is released, a kick-off spring pushes the cover away from the baffle, guided by a plunger moving through a guide. Because four Frangibolt Actuators and four

switch washers are installed on the Baffle Cover, an umbilical electrical connector will be employed at the hinged restraint point.

The described cover release scheme causes the kickoff line of force to pass through or near the center of mass of the cover, minimizing rotation of the cover, helping ensure a clean ejection. Note that this general scheme could be used to eject the cover in nearly any direction by hinging at different points and/or by rotating the cover to different angles relative to the baffle.

The baffle half of each Frangibolt assembly is modeled as a one half pound dead weight at the edge of the baffle shell. The hinge/kickoff mechanism is modeled as an additional 2.5 pound dead weight at the appropriate position on the end of the baffle.

Split/hinged Baffle Contamination Cover mounting/deployment scheme

In this configuration, the cover halves are hinged near the ends of the short axis of the ellipse, and the corners of each half are restrained to the baffle using a redundant Frangibolt actuator layout as described for the ejectable cover. The hinges are spring loaded, so that when the restraints are released, the cover halves rotate open. Each half rotates on the order of 250 degrees, until it reaches its stop, on the side of the baffle shell. The stop may employ a latch, or it may simply rely on the hinge spring torque to keep the cover halves in place. The stop may or may not itself utilize a spring to absorb deployment energy. The entire assembly must have a natural frequency not less than 10 hertz in the deployed configuration for spacecraft maneuvering stability on orbit.

In the finite element model of this study, the fixed part of the hinge is represented as an extended portion at the end of the baffle, with a weight of 2 pounds per cover half. The baffle half of each Frangibolt assembly is modeled as a one half pound dead weight at the edge of the baffle shell. Each travel stop is modeled as a stiffening triangular plate within one of the baffle/gusset assemblies, weighing one half pound, and providing additional stiffness to the point of contact between the baffle cover and the baffle shell.

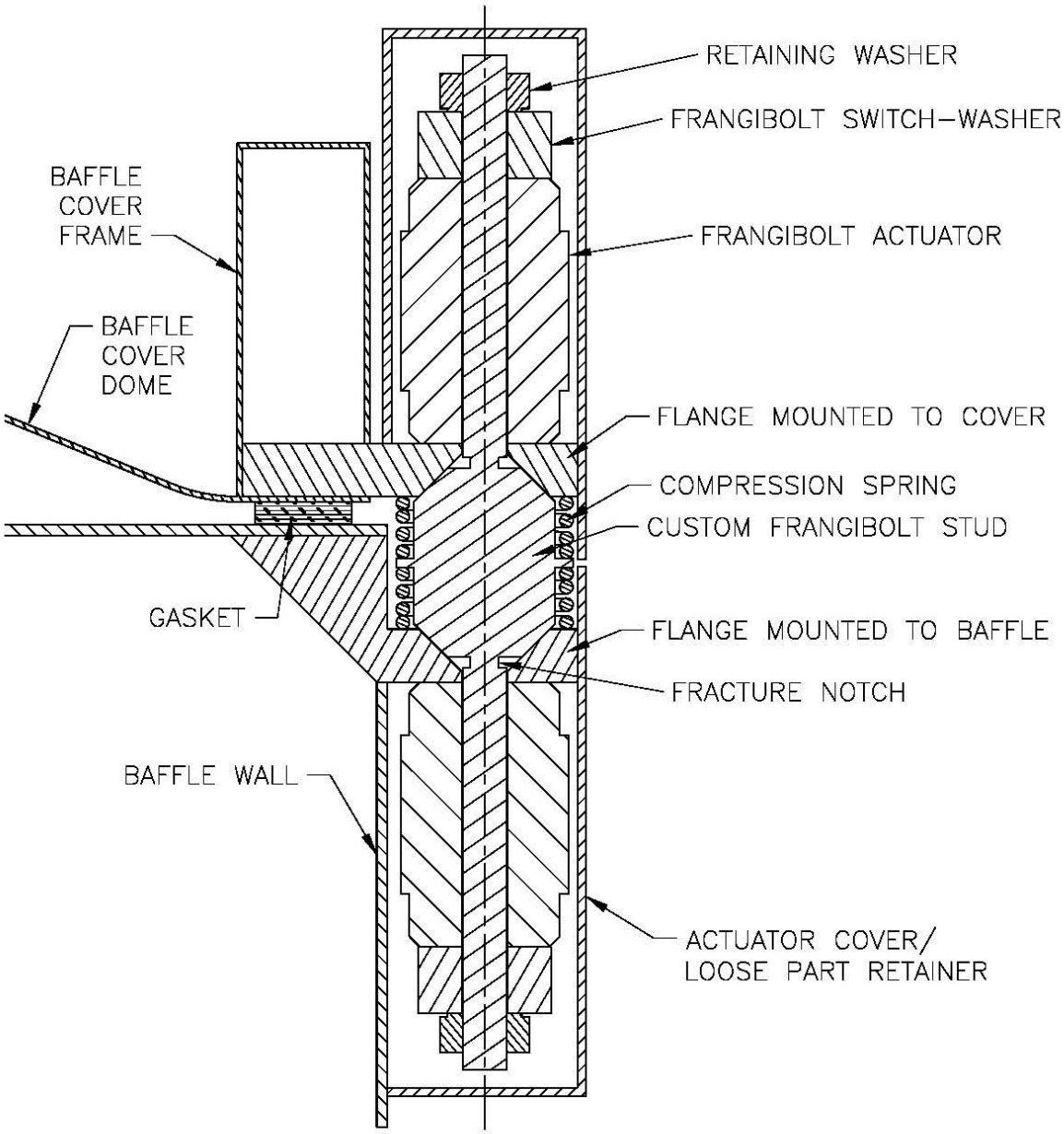

Figure 20-Redundant Frangibolt Actuator layout

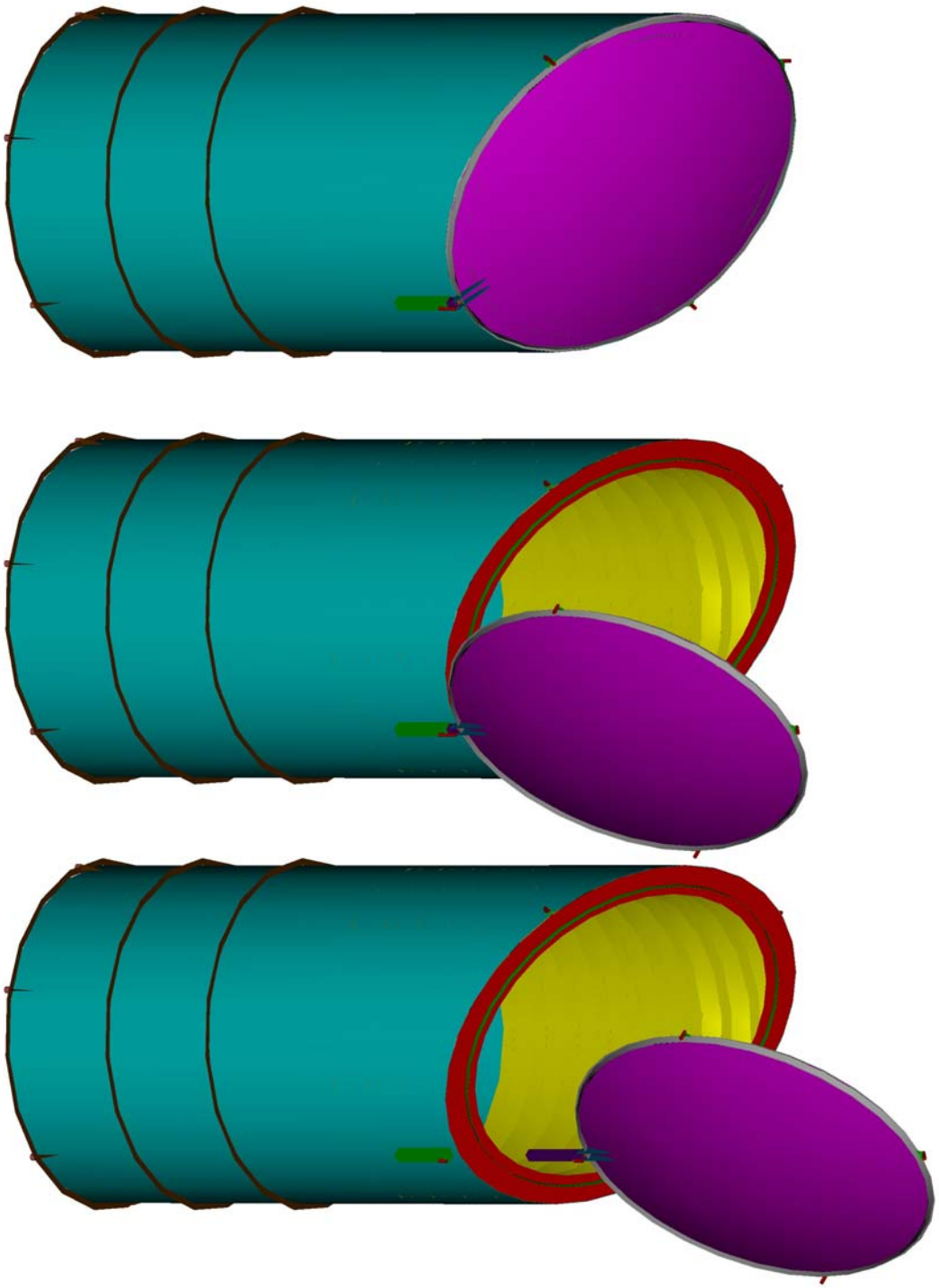

Figure 21-Possible Baffle Cover ejection sequence

Appendix A-Frangibolt Product Literature