174 POCKETS HAVE CONVEX SPHERICAL BOTTOMS. SEE SECTION A-A.
6 POCKETS HAVE FLAT BOTTOMS. SEE SECTIONS C-C, D-D, E-E.
180 POCKETS TOTAL.
12 POCKETS SURROUNDING THE INNER HOLE ARE NOT EQUILATERAL TRIANGLES.

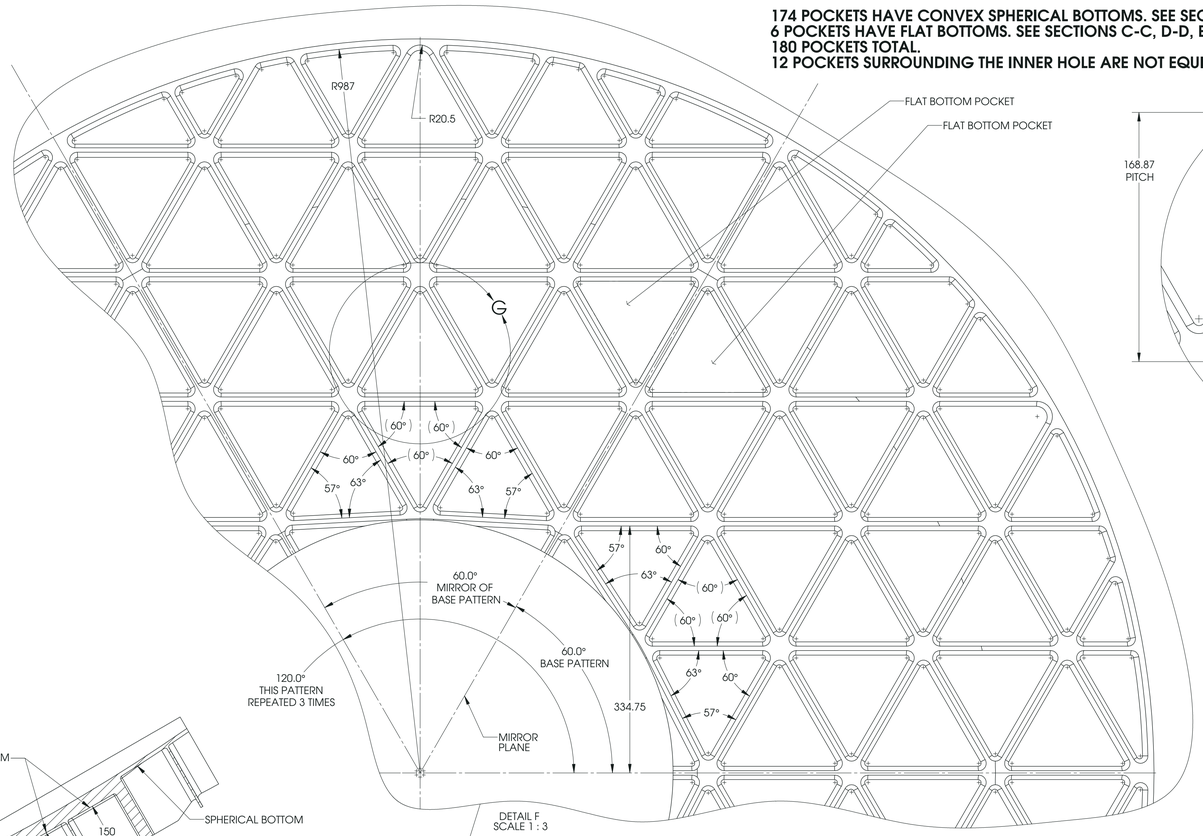

DETAIL F
SCALE 1 : 3

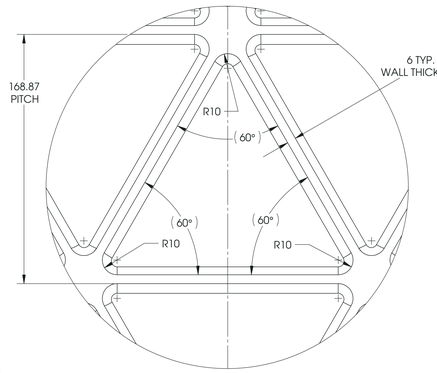

DETAIL G
SCALE 2 : 3
TYPICAL TRIANGLE POCKET DETAIL

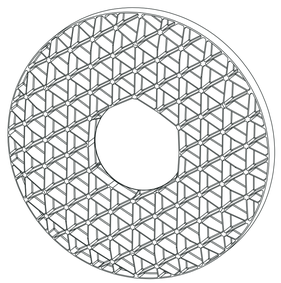

ISO BACK VIEW

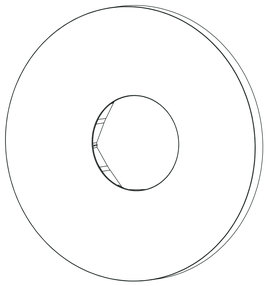

ISO FRONT VIEW

PREVIEW COPY
NOT FOR FABRICATION

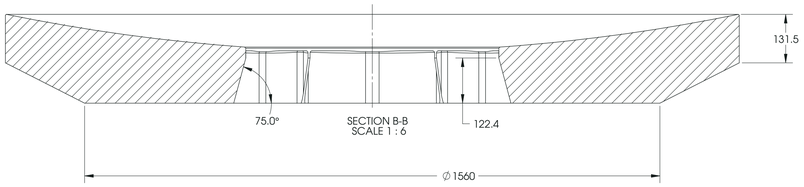

SECTION B-B
SCALE 1 : 6

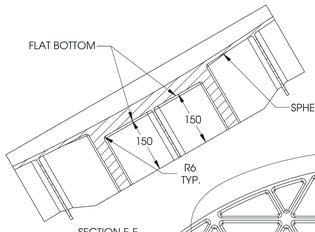

SECTION E-E
SCALE 1 : 6

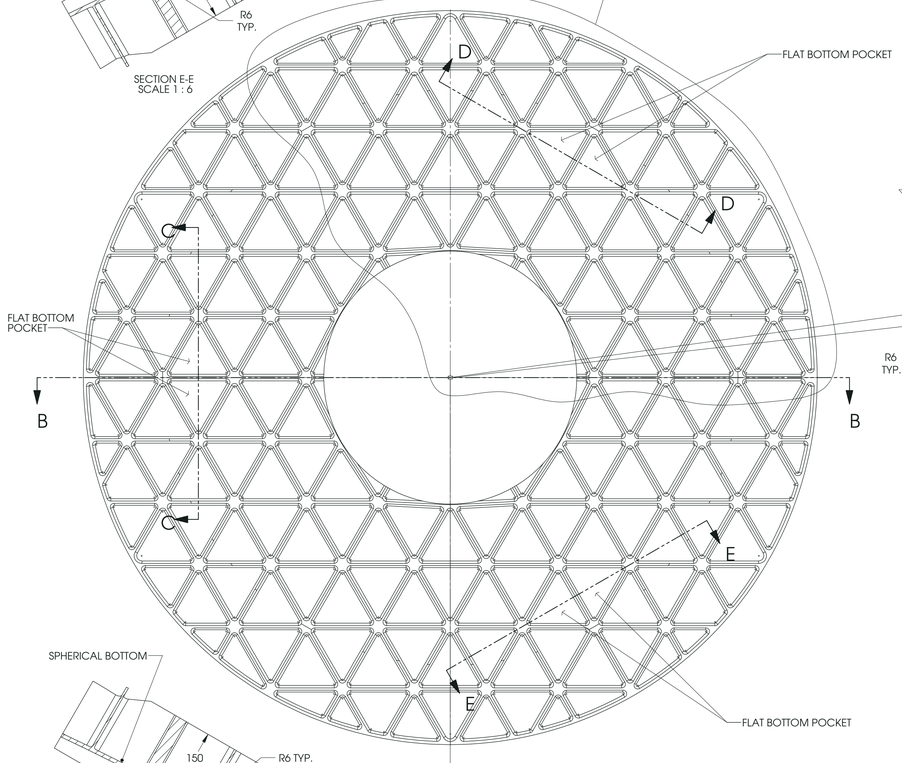

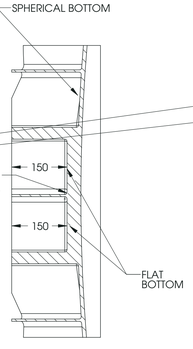

SECTION C-C
SCALE 1 : 6

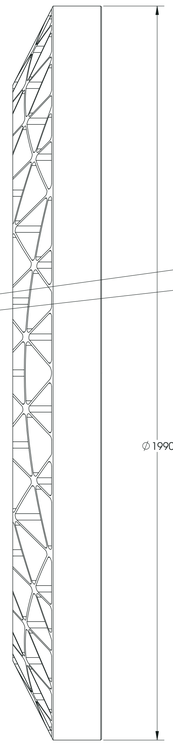

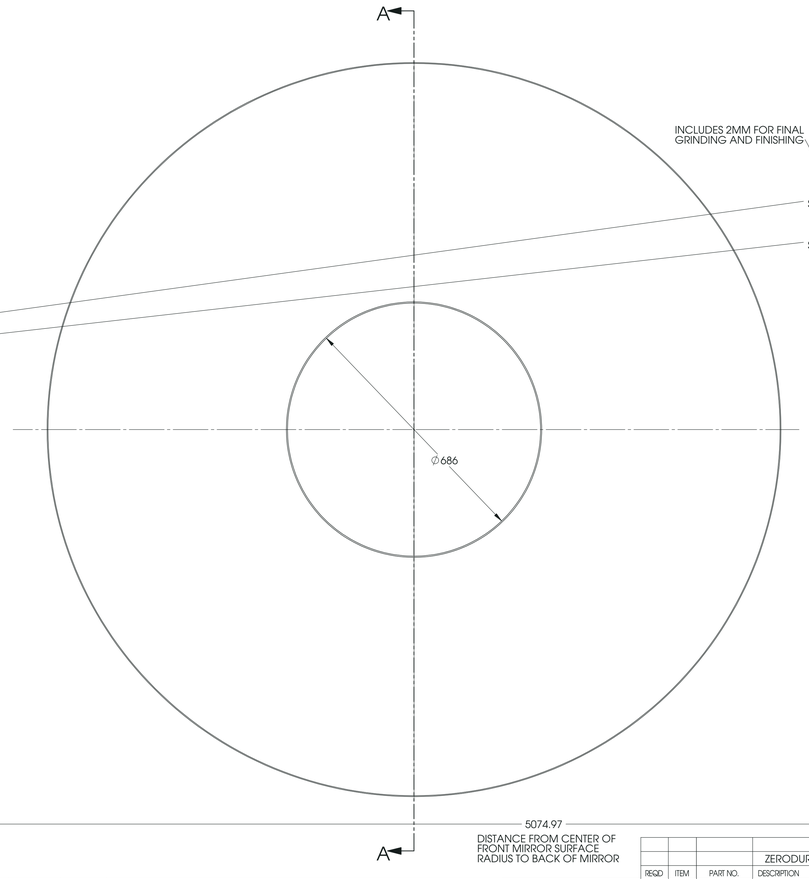

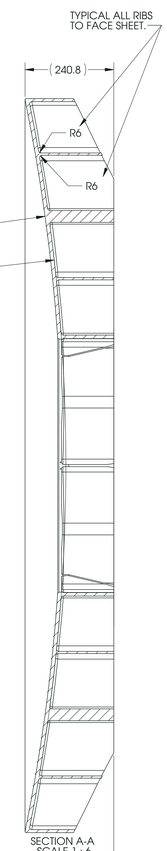

SECTION A-A
SCALE 1 : 6

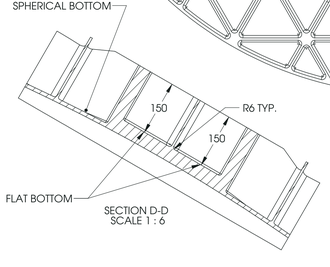

SECTION D-D
SCALE 1 : 6

AS SHOWN, THIS PART WEIGHTS APPROX. 222 KG.
AFTER FINISHING, THIS PART WILL WEIGHT APPROX. 208 KG.

DIMENSIONS ARE IN MM.

REV	AUTHOR	APPROVER	DATE	CHANGE DESCRIPTION
A	M. Hoff	—	7/14/06	INITIAL REVISION

REQ'D	ITEM	PART NO.	DESCRIPTION
			ZERODUR

UNLESS OTHERWISE SPECIFIED
TOLERANCES: .X :- .XX:– .XXX:—
FRACTIONS: -/–
ANGLES: -.-°/INCH
MACH. SURFS.: 125 ✓ μm/m
REF ASME Y14.5M-1994, THREADS ARE CLASS 2
BREAK EDGES .016 MAX. ON MACHINED WORK
REMOVE BURRS, WELD SPLATTER & LOOSE SCALE

PROJECT NAME: SNAP
PROJECT NUMBER: NONE
DO NOT SCALE PRINT
SCALE: 1:6
CATEGORY CODE: XX0000
THIRD ANGLE PROJECTION

ERNEST ORLANDO LAWRENCE
BERKELEY NATIONAL LABORATORY
UNIVERSITY OF CALIFORNIA

SNAP
PRIMARY MIRROR
TAPER OPEN BACK - 2 METER - ROUGH MACHINE

SHEET 1 OF 1 | SIZE: E | DWG NO: TBF3Z1990 | REV A