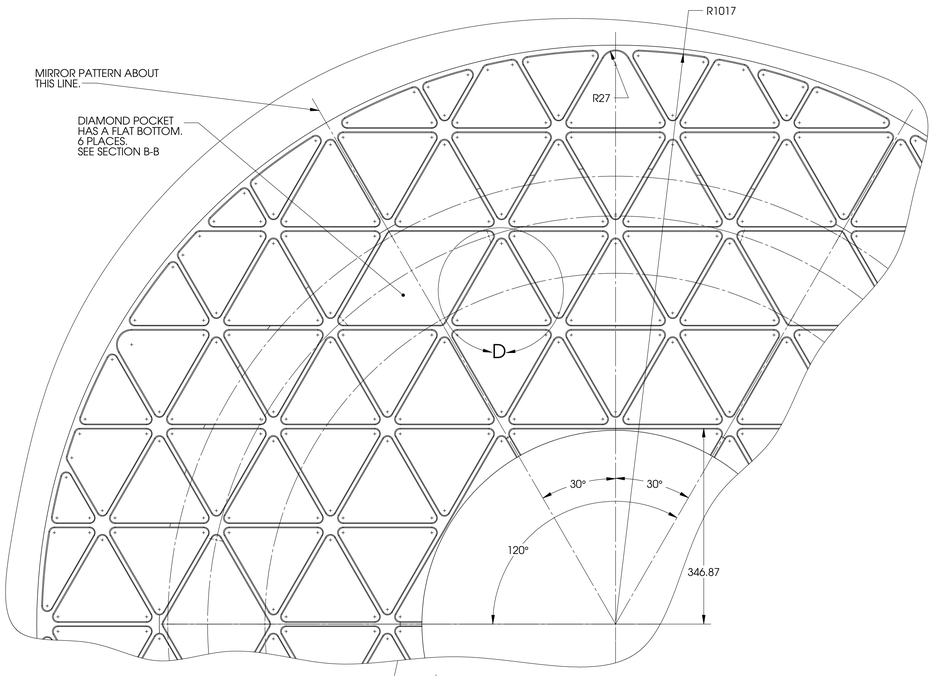

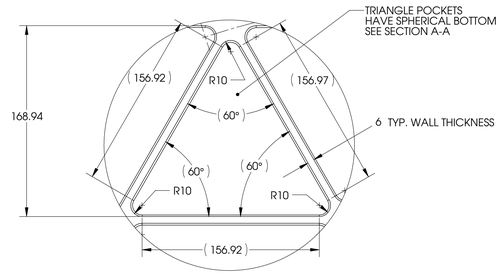

DETAIL D
SCALE 1 : 2
TYPICAL TRIANGLE POCKET DETAIL

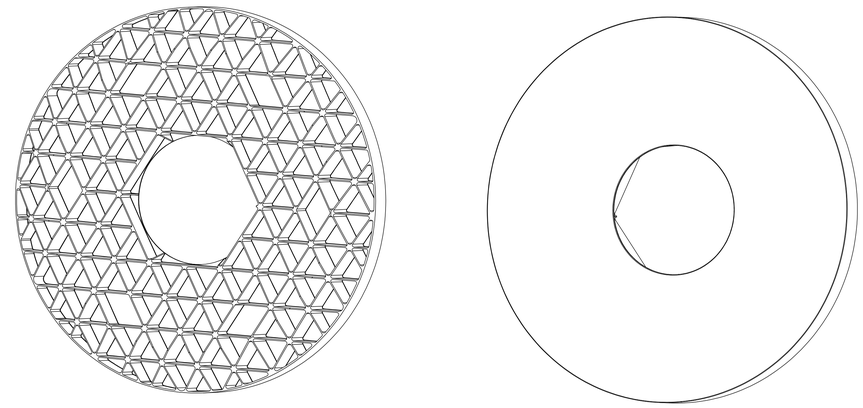

PREVIEW COPY
NOT FOR FABRICATION

DETAIL C
SCALE 1 : 4

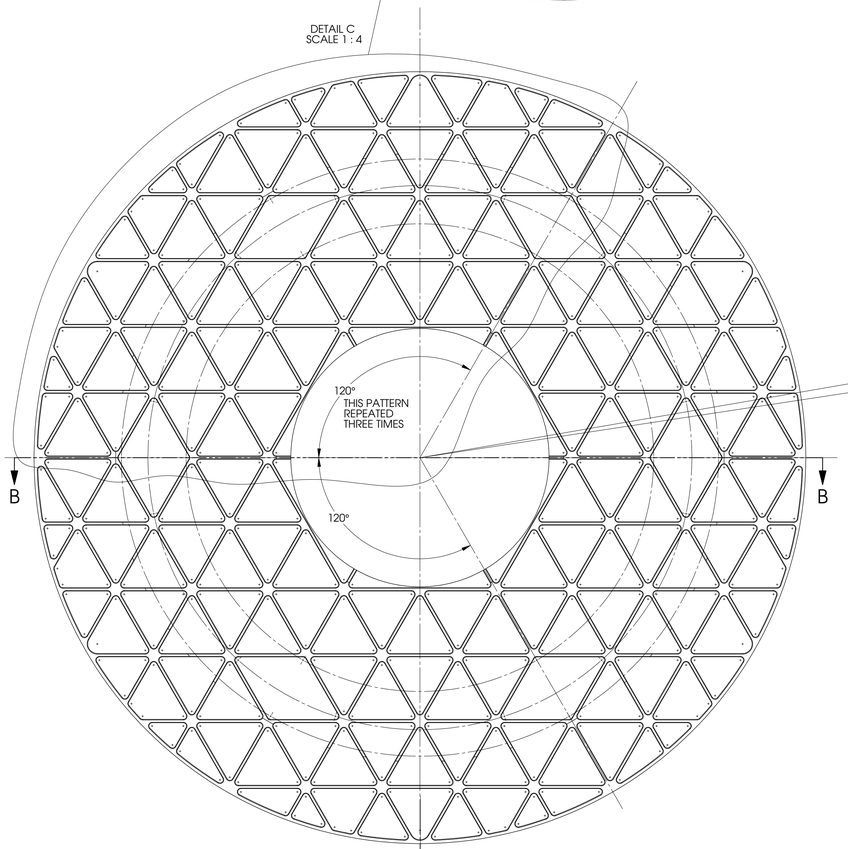

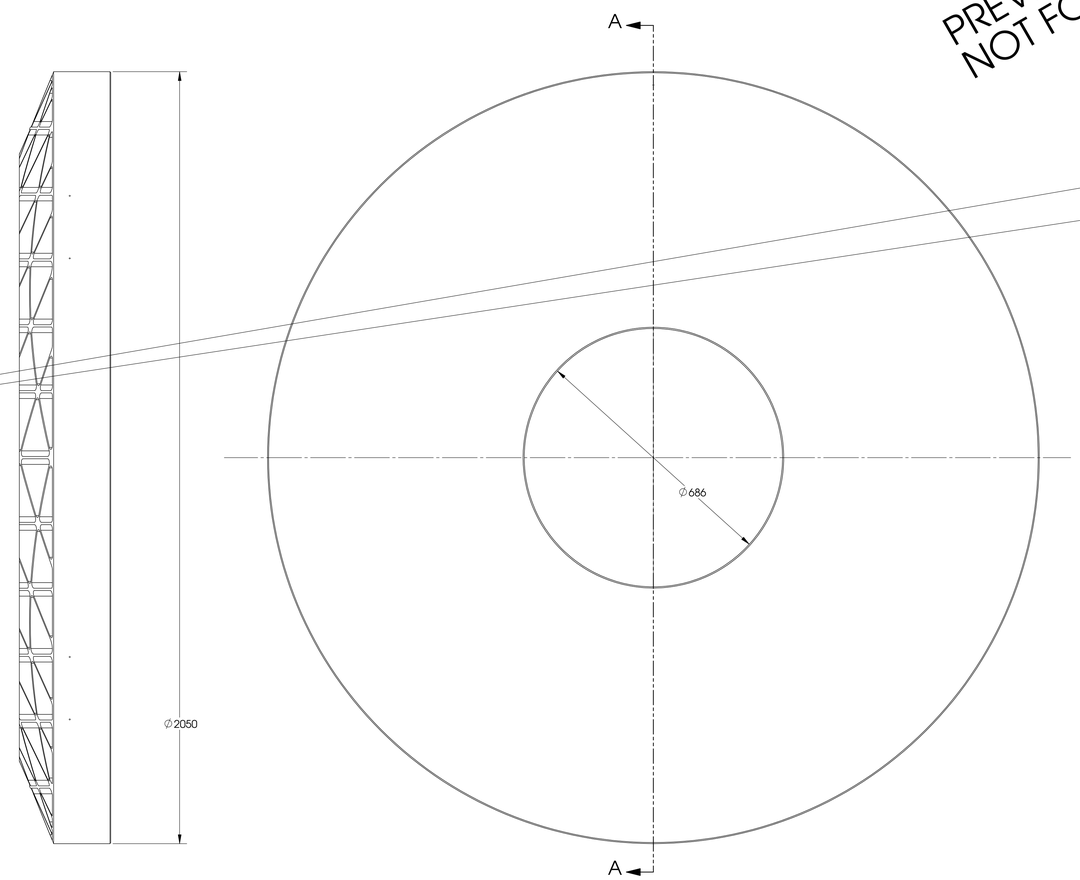

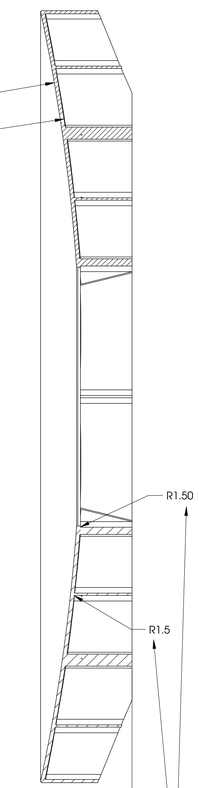

5043.16

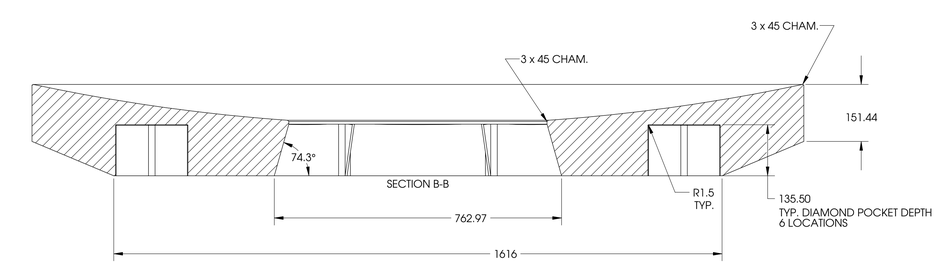

THIS PART WEIGHTS APPROX. 246 KG.

DIMENSIONS ARE IN MM.

REV	AUTHOR	APPROVER	DATE	CHANGE DESCRIPTION
A	???	???	???	INITIAL REVISION

REQ'D	ITEM	PART NO.	DESCRIPTION
			ZERODUR GRADE B

UNLESS OTHERWISE SPECIFIED
TOLERANCES: X.- .XX.– .XXX.—
FRACTIONS: -/–
ANGLES: -.-°/INCH
MACH. SURFS.: 125 ✓ (CR ARITH)
REF ASME Y14.5M-1994, THREADS ARE CLASS 2
BREAK EDGES .01 MAX. ON MACHINED WORK
REMOVE BURRS, WELD SPLATTER & LOOSE SCALE

PROJECT NAME: SNAP
PROJECT NUMBER: NONE
DO NOT SCALE PRINT
SCALE: 1:6
CATEGORY CODE: XX0000
THIRD ANGLE PROJECTION

ERNEST ORLANDO LAWRENCE
BERKELEY NATIONAL LABORATORY
UNIVERSITY OF CALIFORNIA

SNAP
PRIMARY MIRROR
TAPER OPEN BACK - 2 METER - ROUGH MACHINE

1 SHEET OF 1 | SIZE: E | DWG NO: TBFZ2050 | REV A